EXTERIOR

CONTENTS

FRONT BUMPER 2
REAR BUMPER 4
EXTERIOR PARTS 5
MOULDING AND GARNISH 6
- SPECIAL TOOL 6
- MOULDING AND GARNISH 7

WINDSHIELD WIPER AND WASHER 10
- SERVICE SPECIFICATIONS 10
- SPECIAL TOOLS 10
- TROUBLESHOOTING 10
- WINDSHIELD WIPER AND WASHER 17

REAR WIPER AND WASHER 20
- SERVICE SPECIFICATION 20
- SPECIAL TOOLS 20
- TROUBLESHOOTING 20
- REAR WIPER AND WASHER 26

HEADLAMP WASHER <VEHICLES EXCEPT FOR HONG KONG> 28
- SPECIAL TOOLS 28
- TROUBLESHOOTING 28
- HEADLAMP WASHER 30

MARKS 32
OUTSIDE DOOR MIRROR 34
- SPECIAL TOOLS 34
- TROUBLESHOOTING 34
- OUTSIDE DOOR MIRROR 37

FRONT BUMPER

REMOVAL AND INSTALLATION

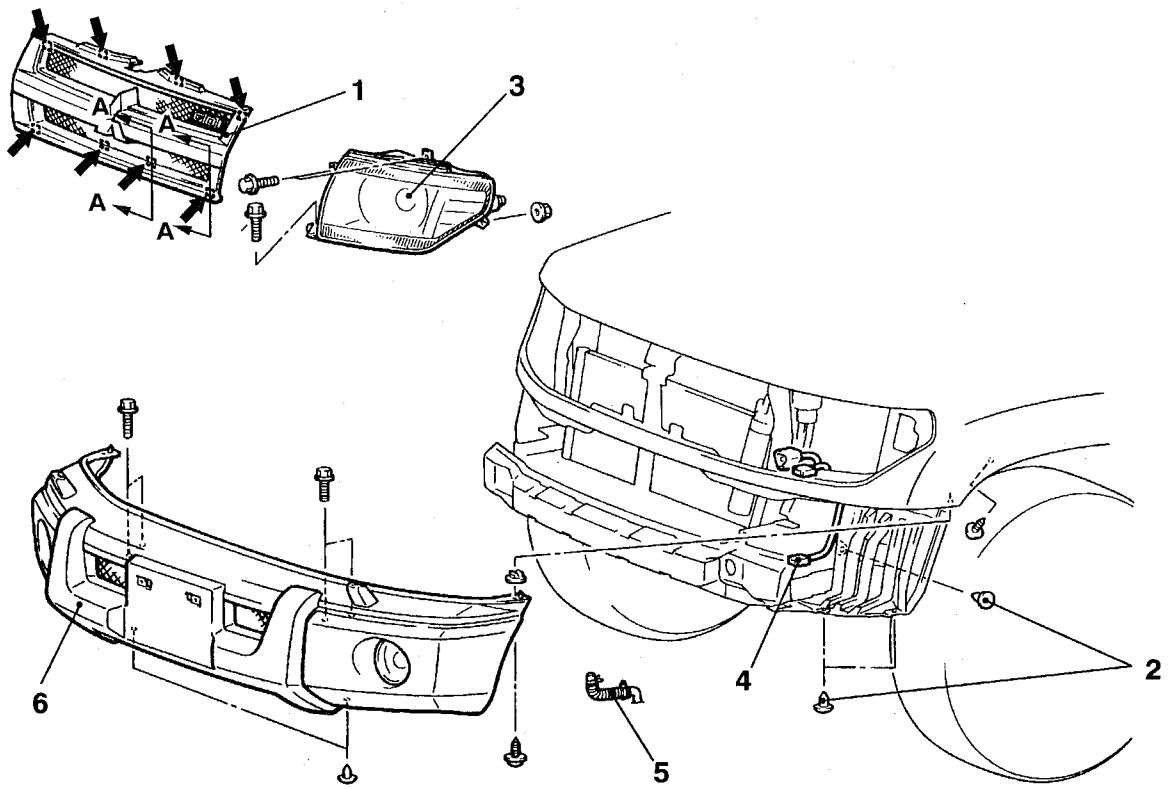

NOTE
⬅ : Clip positions

AW1252AL

Section A – A

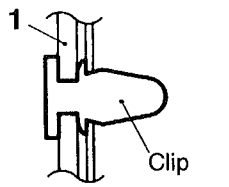

AW0316AL

Removal steps

◀A▶ 1. Radiator grille
2. Splash shield installation clips
3. Headlamp
4. Fog lamp connector
5. Headlamp washer hose connection (Vehicles with headlamp washer)
6. Front bumper assembly

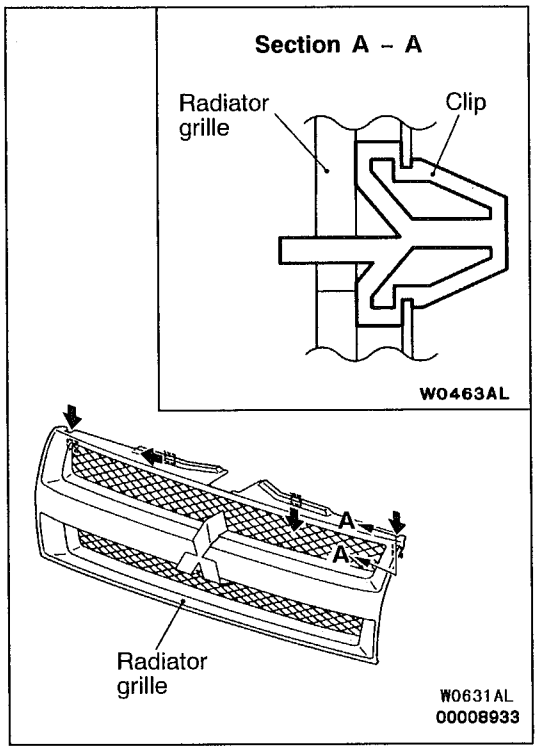

REMOVAL SERVICE POINT

◀A▶ RADIATOR GRILLE REMOVAL

Remove the radiator grille by pushing the tab of the radiator grille clips in the direction of the arrows with a flat-tipped screwdriver, while lightly pulling the radiator grille towards you.

DISASSEMBLY AND REASSEMBLY

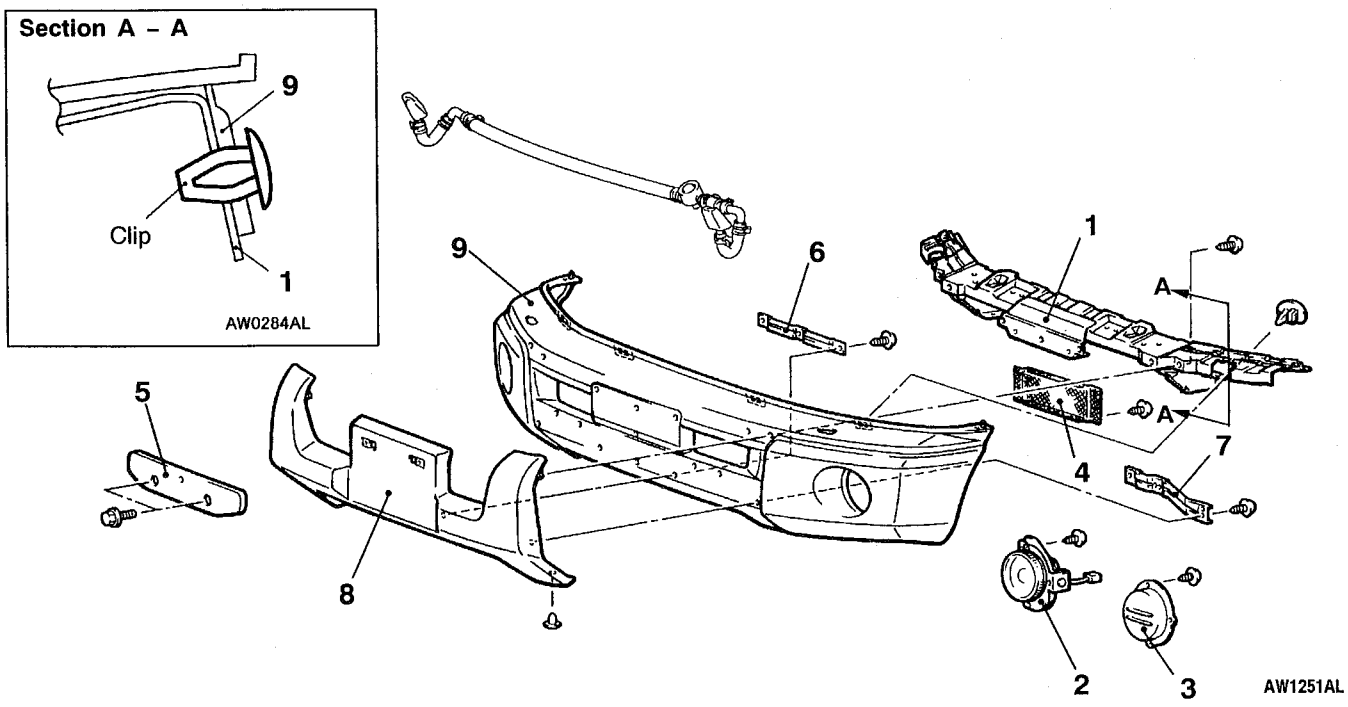

Disassembly steps

1. Front bumper reinforcement assembly
- Headlamp washer assembly (Refer to P.51-30) (Vehicles with headlamp washer)
2. Fog lamp
3. Fog lamp cover (Vehicles without fog lamp)
4. Bumper net
5. Licence plate bracket
6. Bumper extension centre plate (Vehicles with front bumper extension)
7. Bumper extension side plate (Vehicles with front bumper extension)
8. Front bumper extension (Vehicles with front bumper extension)
9. Front bumper face

REAR BUMPER

REMOVAL AND INSTALLATION

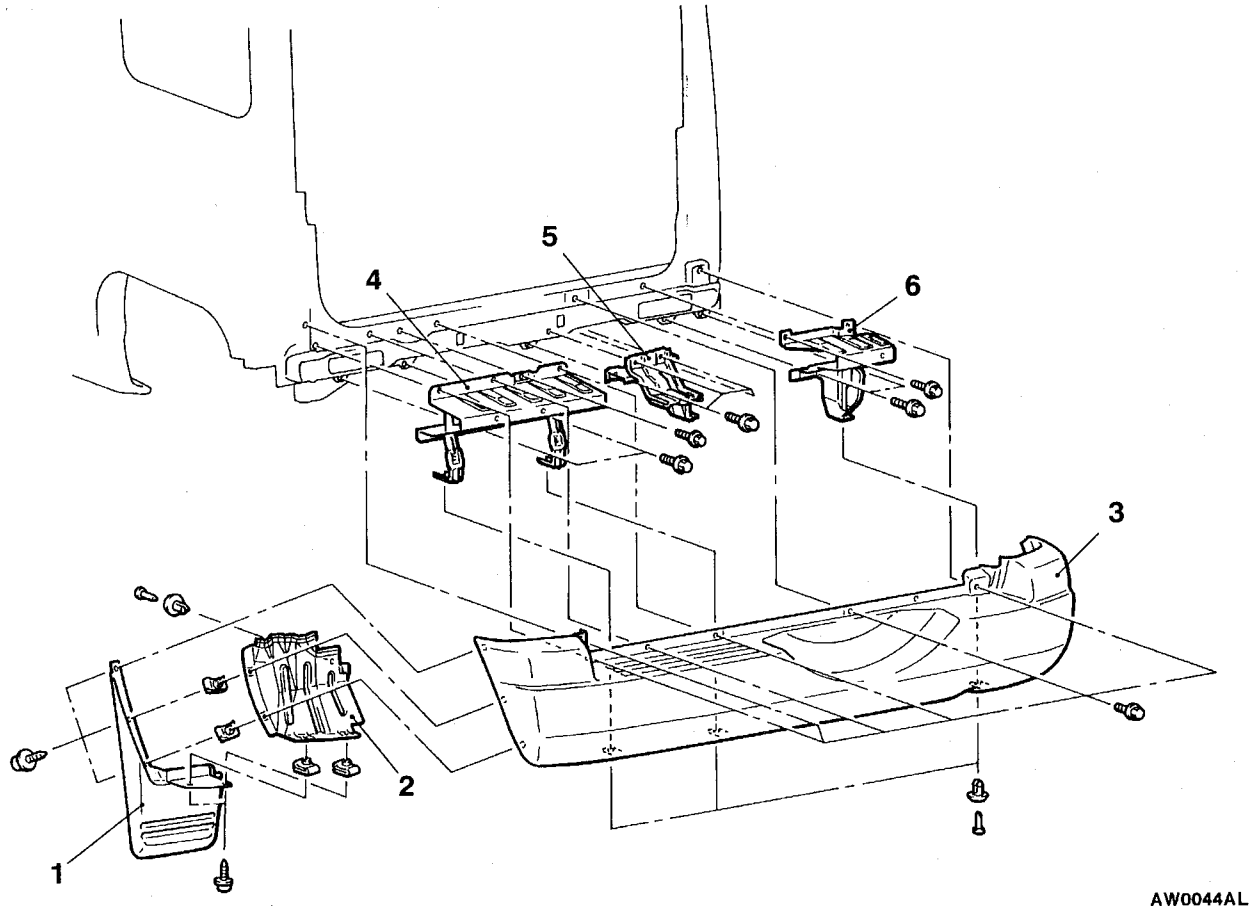

Removal steps

1. Rear mud guard
2. Rear splash shield
3. Rear bumper face
4. Bumper step reinforcement assembly
5. Bumper center reinforcement assembly
6. Bumper side reinforcement assembly

EXTERIOR PARTS

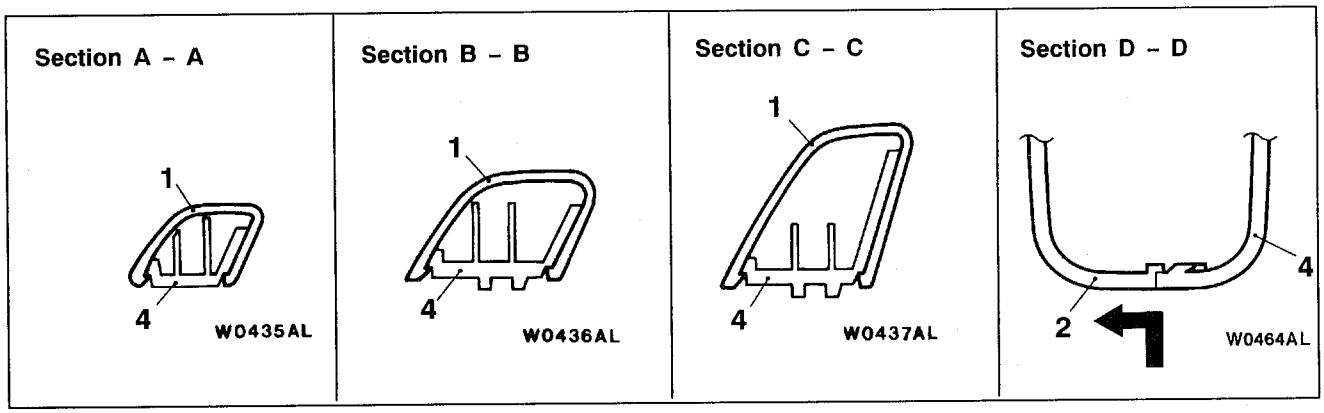

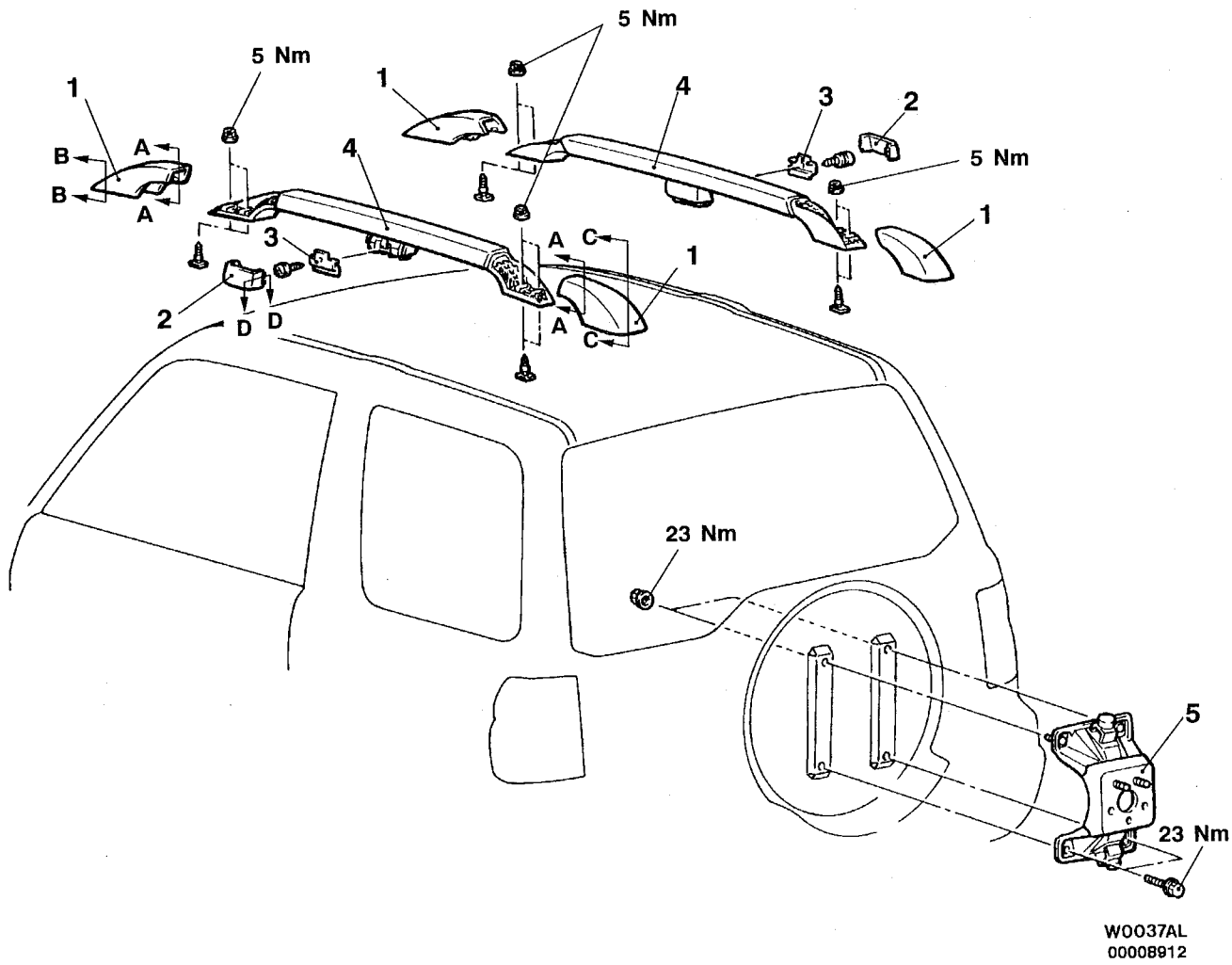

Roof rail removal steps

◀A▶ 1. Roof rack cover (front, rear)
2. Roof rack cover (side)
3. Center bracket
4. Roof bar

Spare tyre carrier removal steps

- Spare tyre
- Back door trim and waterproof film (Refer to GROUP 42.)

5. Spare tyre carrier

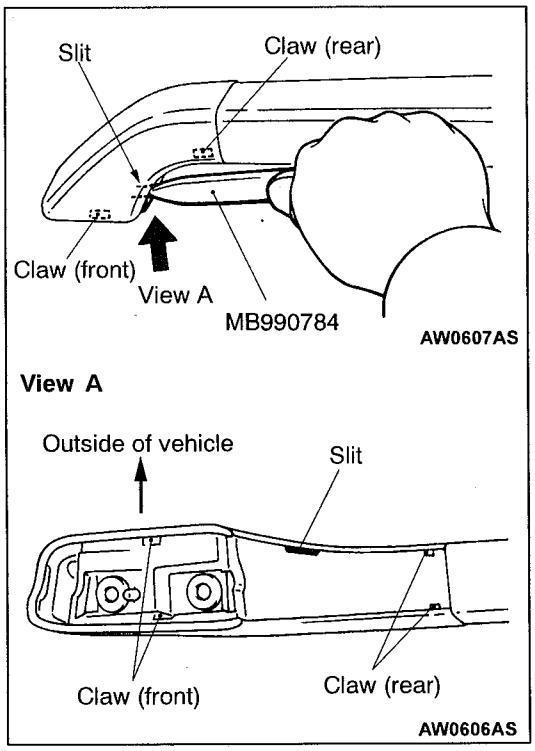

REMOVAL SERVICE POINT

◀A▶ ROOF RACK COVER (FRONT, REAR) REMOVAL

1. Insert the special tool into the slit.

   NOTE
   The roof rack assembly has the slit.
2. Insert the special tool as far as possible and remove the claw (front) by prying the roof rack cover toward you.
3. Remove the claw (rear).

Caution
Spread out the roof rack cover sufficiently and pull it upward, otherwise the claws will be broken.

MOULDING AND GARNISH

SPECIAL TOOL

Tool	Number	Name	Use
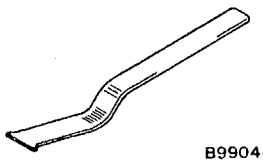 B990449	MB990449	Window moulding remover	Removal of roof drip moulding.

MOULDING AND GARNISH

REMOVAL AND INSTALLATION

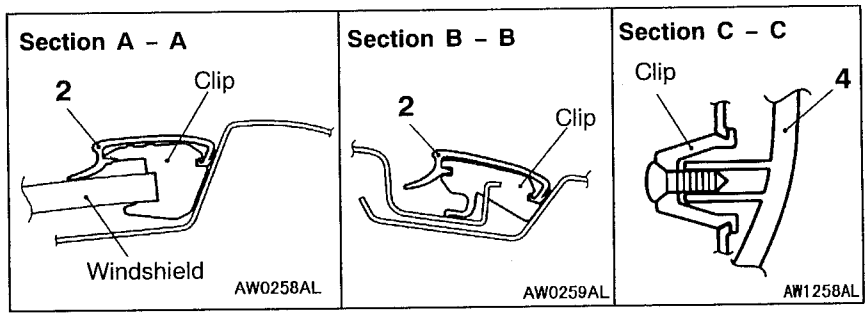

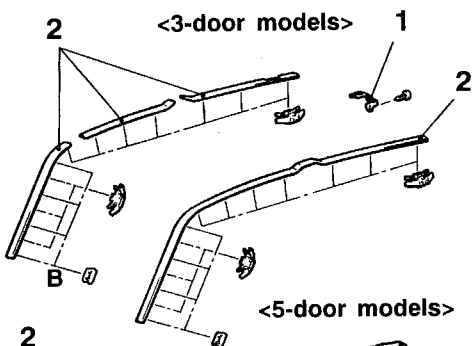

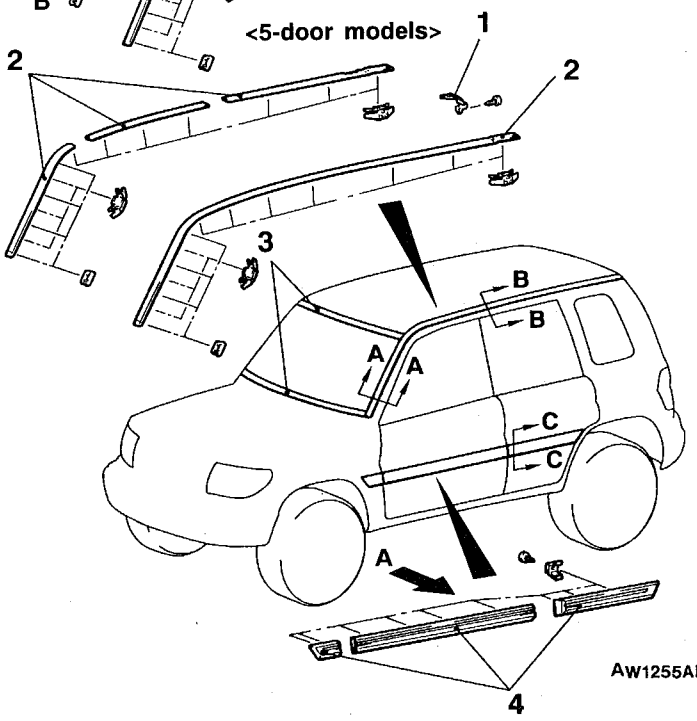

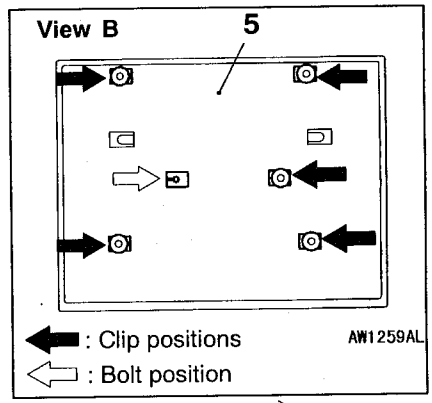

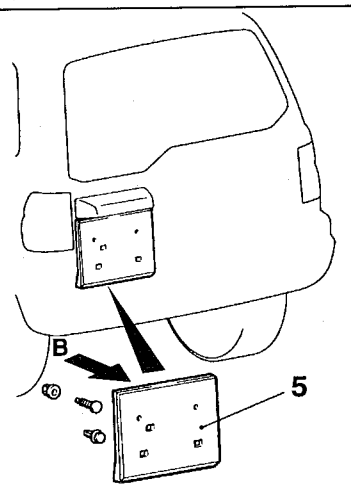

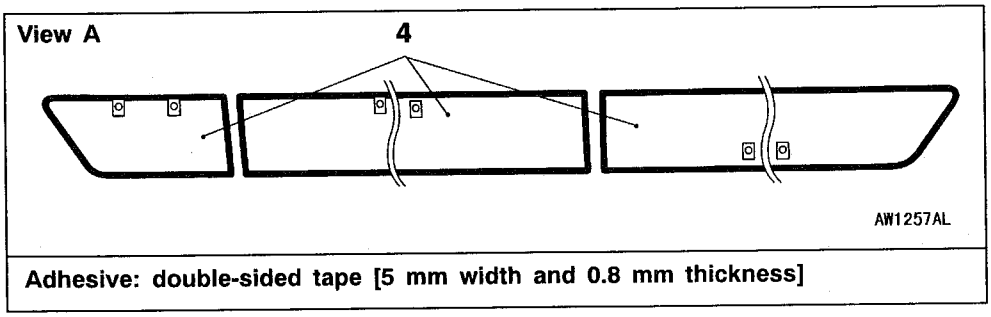

Adhesive: double-sided tape [5 mm width and 0.8 mm thickness]

Roof drip moulding removal steps

- Roof rail assembly

◀A▶

1. Roof drip cover
2. Roof drip moulding
3. Windshield moulding (Refer to GROUP 42 – Windshield.)

◀B▶

Side protector moulding removal

4. Side protector moulding (Vehicles with side protector moulding)

Rear licence plate garnish removal steps

- Back door trim (Refer to GROUP 42 – Back door.)

5. Rear licence plate garnish

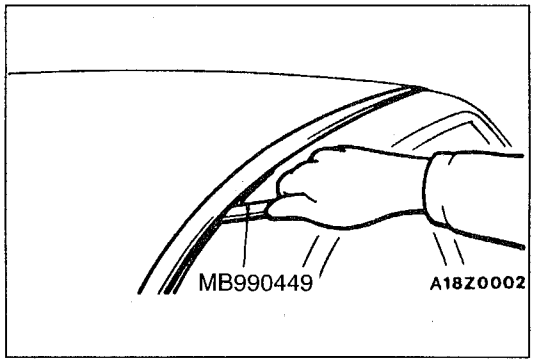

REMOVAL SERVICE POINT

◀A▶ ROOF DRIP MOULDING REMOVAL

Use the special tool to lever out the moulding.

Caution
If the moulding has become warped, it should not be reused.

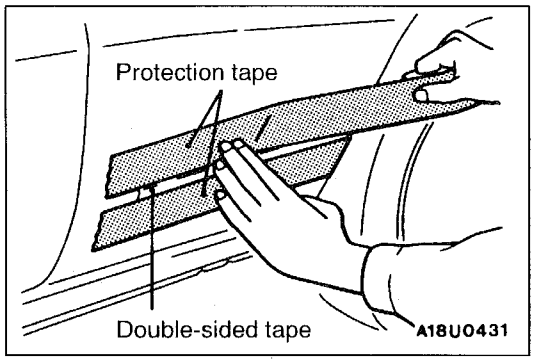

◀B▶ SIDE PROTECT MOULDING REMOVAL

1. Attach protection tape all the way along the edges of the double-sided tape which is still adhering to the body.

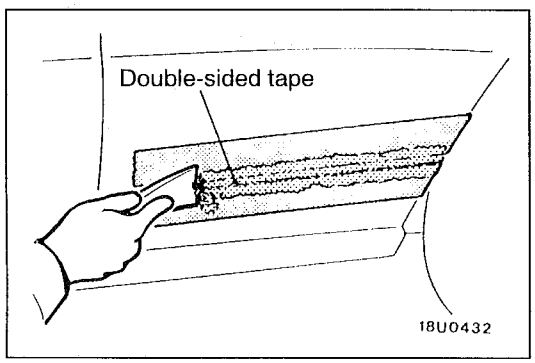

2. Use a resin spatula to scrape off the double-sided tape.
3. Peel off the protection tape.
4. Wipe the body surface and clean it with a rag moistened with isopropyl alcohol.

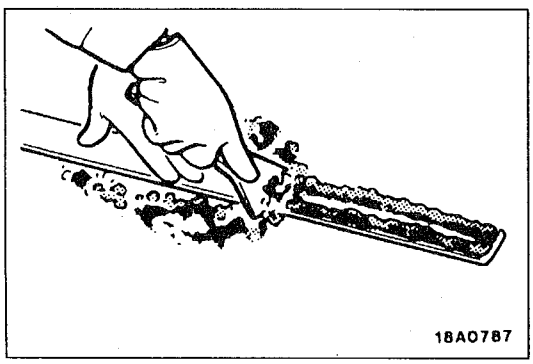

INSTALLATION SERVICE POINTS

▶A◀ SIDE PROTECT MOULDING INSTALLATION

Double-sided tape affixing to the side protect moulding (when reusing)

1. Scrape off the double-sided tape with a resin spatula or gasket scraper.
2. Wipe off the side protect moulding adhesion surface and clean it with a shop towel moistened with isopropyl alcohol.
3. Affix the specified double sided tape to the side protect moulding. (Refer to P.51-7.)

   Specified adhesive tape:
   Double-sided tape: 5 mm width and 0.8 mm thickness

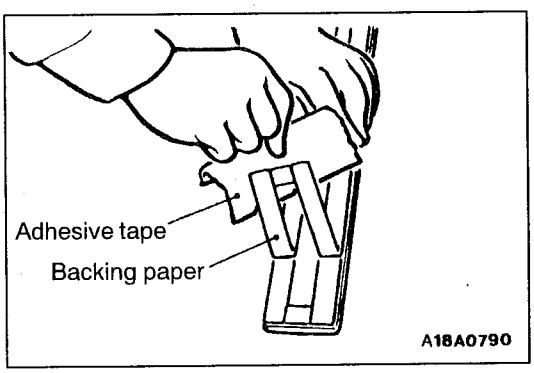

4. Remove strip paper from the pressure sensitive double-sided tape.

   NOTE
   Affix double-sided tape to the end of strip paper for ease of strip paper removal. (Refer to P.51-7.)

5. Install the side protect moulding.

   NOTE
   If it is hard to affix the double-sided tape in winter, heat the application surfaces at both the vehicle body and the side protect moulding.

   Body 40 – 60°C

   Side protect moulding 20 – 30 °C

   Apply pressure fully to the side protect moulding.

WINDSHIELD WIPER AND WASHER

SERVICE SPECIFICATIONS

Items		Standard value
Park position of windshield wiper arm and blade assembly (Distance between wiper blade and windshield lower moulding) mm	Driver's side	20 ± 5
	Passenger's side	20 ± 5

SPECIAL TOOLS

Tool	Number	Name	Use
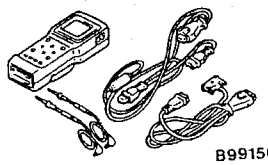 B991502	MB991502	MUT-II sub assembly	• Diagnosis code check • ETACS-ECU input signal check
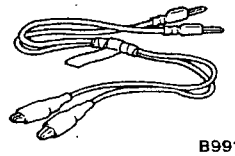 B991529	MB991529	Diagnosis code check harness	• Diagnosis code check • ETACS-ECU input signal check by using a voltmeter

TROUBLESHOOTING

DIAGNOSIS FUNCTION

INPUT SIGNAL INSPECTION PROCEDURE <ETACS>

1. Connect the MUT-II or a voltmeter to the diagnosis connector to check input signal. (Refer to GROUP 00 – How to Use Troubleshooting/Inspection Service Points.)
2. The following input signals can be checked:
   Windshield wiper switch
   - LO
   - HI
   - INT
   - Intermittent variable speed switch
   - MIST

   Windshield washer switch

NOTE
If all of the input signals can not be checked by MUT-II, the cause is probably a malfunction of the diagnosis circuit system.

INSPECTION CHART FOR TROUBLE SYMPTOMS

Trouble symptom	Inspection procedure	Reference page
Communication with the MUT-II is impossible.	Refer to GROUP 54 – SWS.	
The windshield wipers do not operate.(However, the washers operate normally.)	1	51-12
When the wiper switch is set to "LO" position, the wipers do not operate at "LO" mode.	2	51-13
When the wiper switch is set to "HI" position, the wipers do not operate at "HI" mode.	3	51-13
When the wiper switch is set to "INT" position, the wipers do not operate intermittently. (However, the wipers operate normally when the switch is set to "LO" or "HI" position.)	4	51-14
The wipers do not stop when the wiper switch is turned off during the low wiper speed.	5	51-14
The wipers do not stop at normal position when the wiper switch is turned off.	6	51-15
The intermittent wiper speed does not vary when the variable speed switch is operated.	7	51-15
The washers do not operate when the washer switch is operated. (However, the wipers operate normally.)	8	51-16
The wipers do not operate when the washer switch is operated. (However, the washers operate normally.)	9	51-16

INSPECTION PROCEDURE FOR TROUBLE SYMPTOMS

Inspection Procedure 1

The windshield wipers do not operate. (However, the washers operate normally)	Probable cause
The cause may be a malfunction of the wiper switch communication circuit, harness or connector, windshield wiper motor, back-up circuit or front-ECU.	• Malfunction of column switch • Malfunction of wiring harness or connector • Malfunction of windshield wiper motor • Malfunction of front-ECU

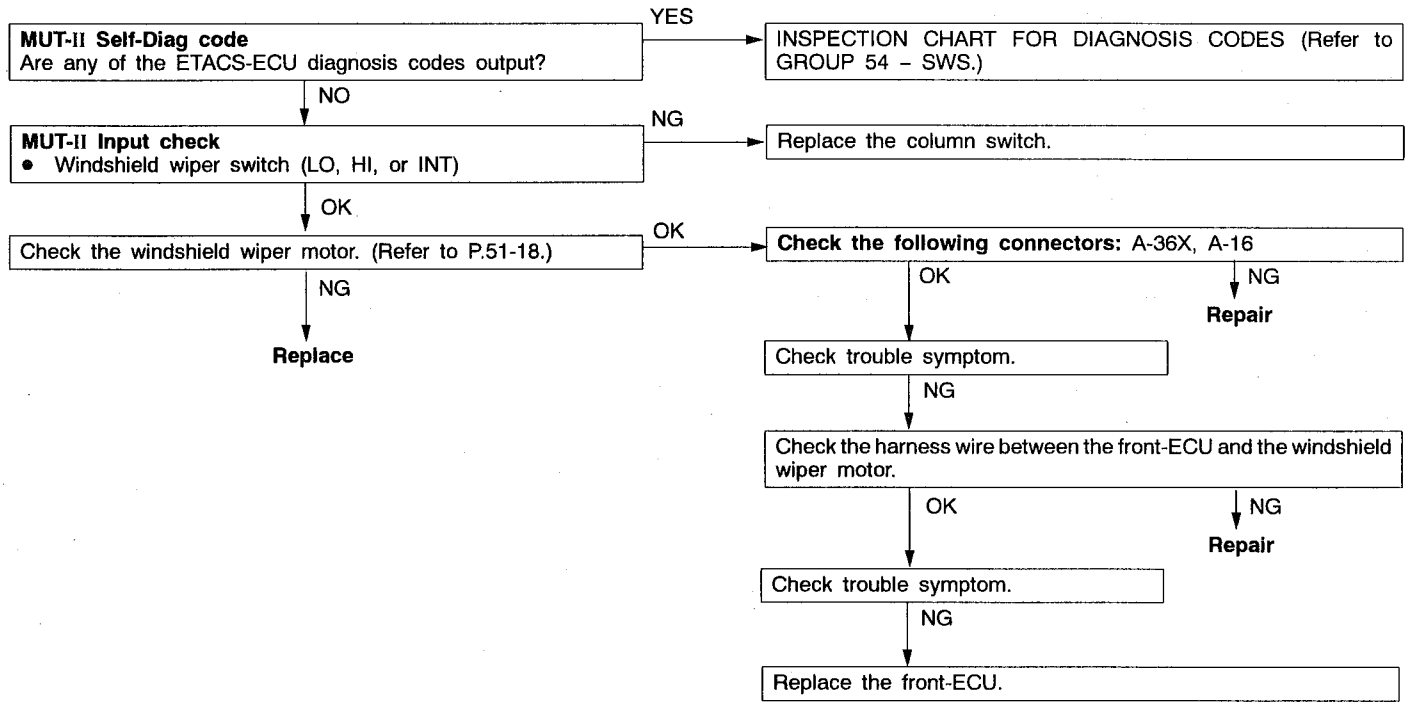

Inspection Procedure 2

When the wiper switch is set to "LO" position, the wipers do not operate at "LO" mode.	Probable cause
The cause may be a malfunction of the wiper switch input circuit, harness or connector, windshield wiper motor, back-up circuit or front-ECU.	• Malfunction of column switch • Malfunction of wiring harness or connector • Malfunction of windshield wiper motor • Malfunction of front-ECU

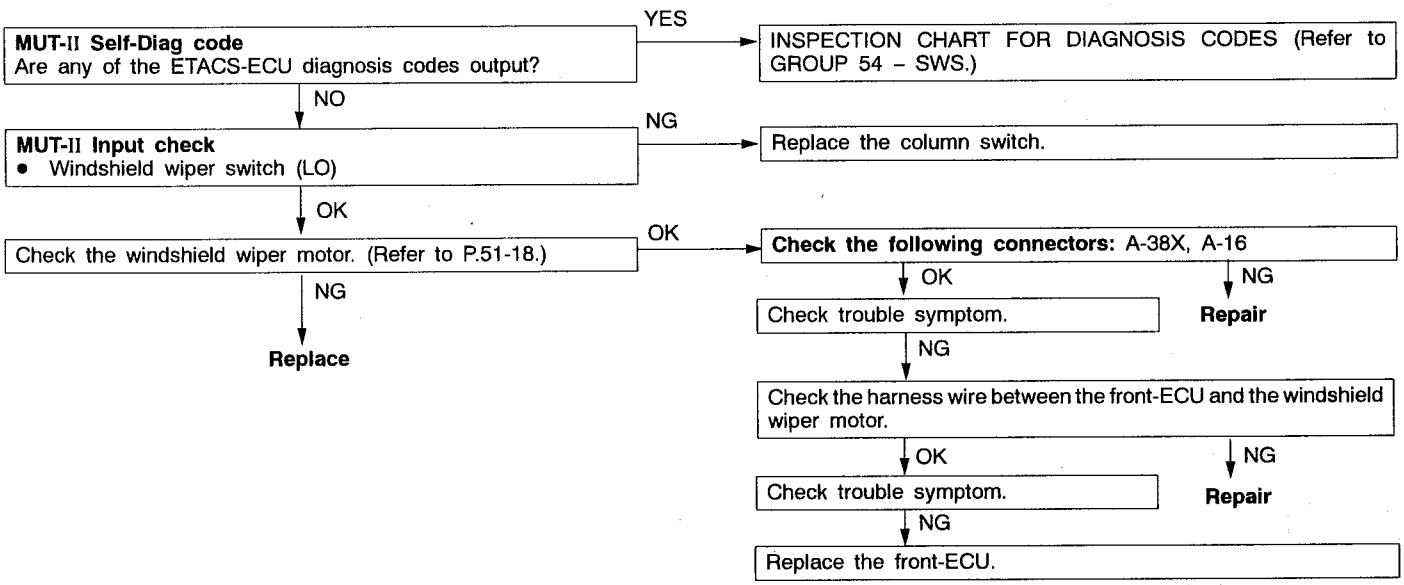

Inspection Procedure 3

When the wiper switch is set to "HI" position, the wipers do not operate at "HI" mode.	Probable cause
The cause may be a malfunction of the wiper switch input circuit, harness or connector, windshield wiper motor. Fail-safe function may be active in the back-up circuit as the wipers operate at the "LO" mode.	• Malfunction of column switch • Malfunction of wiring harness or connector • Malfunction of windshield wiper motor • Malfunction of front-ECU

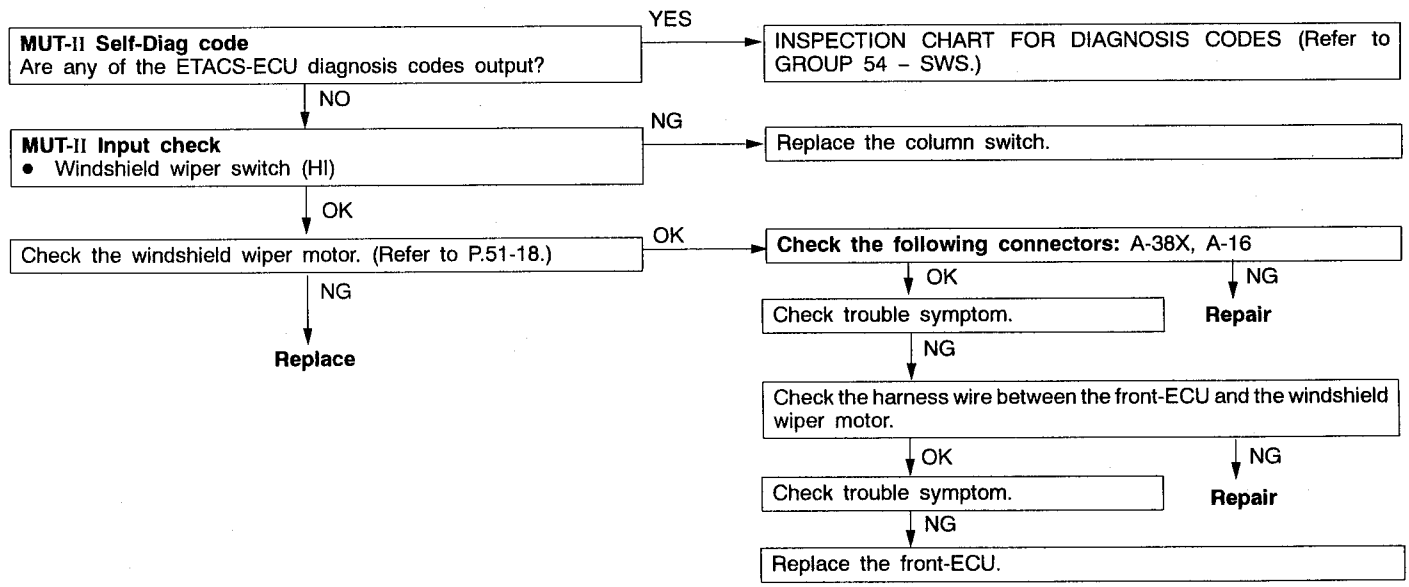

Inspection Procedure 4

When the wiper switch is set to "INT" position, the wipers do not operate intermittently. (However, the wipers operate normally when the switch is set to "LO" or "HI" position.)	Probable cause
The cause may be a malfunction of the wiper switch input circuit, harness or connector. The front-ECU may be normal as the wipers operate at the "LO" or "HI" mode.	• Malfunction of column switch • Malfunction of wiring harness or connector • Malfunction of ETACS-ECU

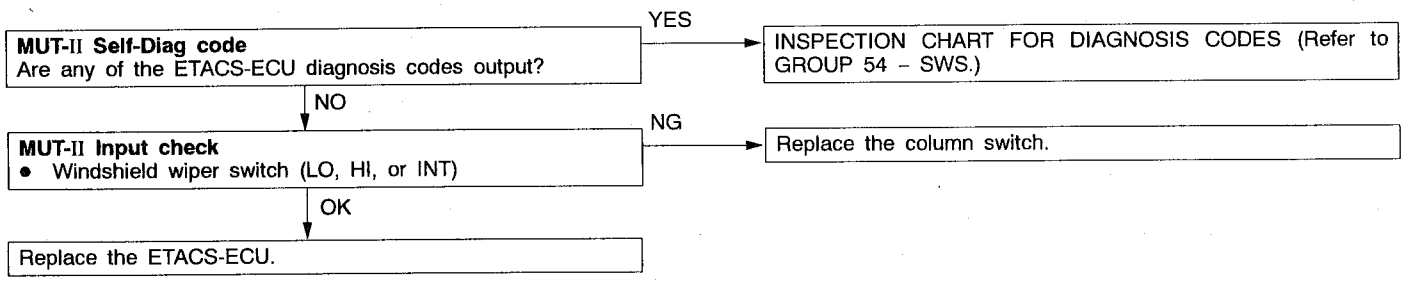

Inspection Procedure 5

The wipers do not stop when the wiper switch is turned off during the low wiper speed.	Probable cause
Probably the front-ECU has stored the conditions before defects take place by a fail-safe function as the windshield wiper motor was shorted or a malfunction occurred in the communication line during the wiper operation.	• Malfunction of windshield wiper motor • Malfunction of wiring harness or connector • Malfunction of column switch • Malfunction of front-ECU

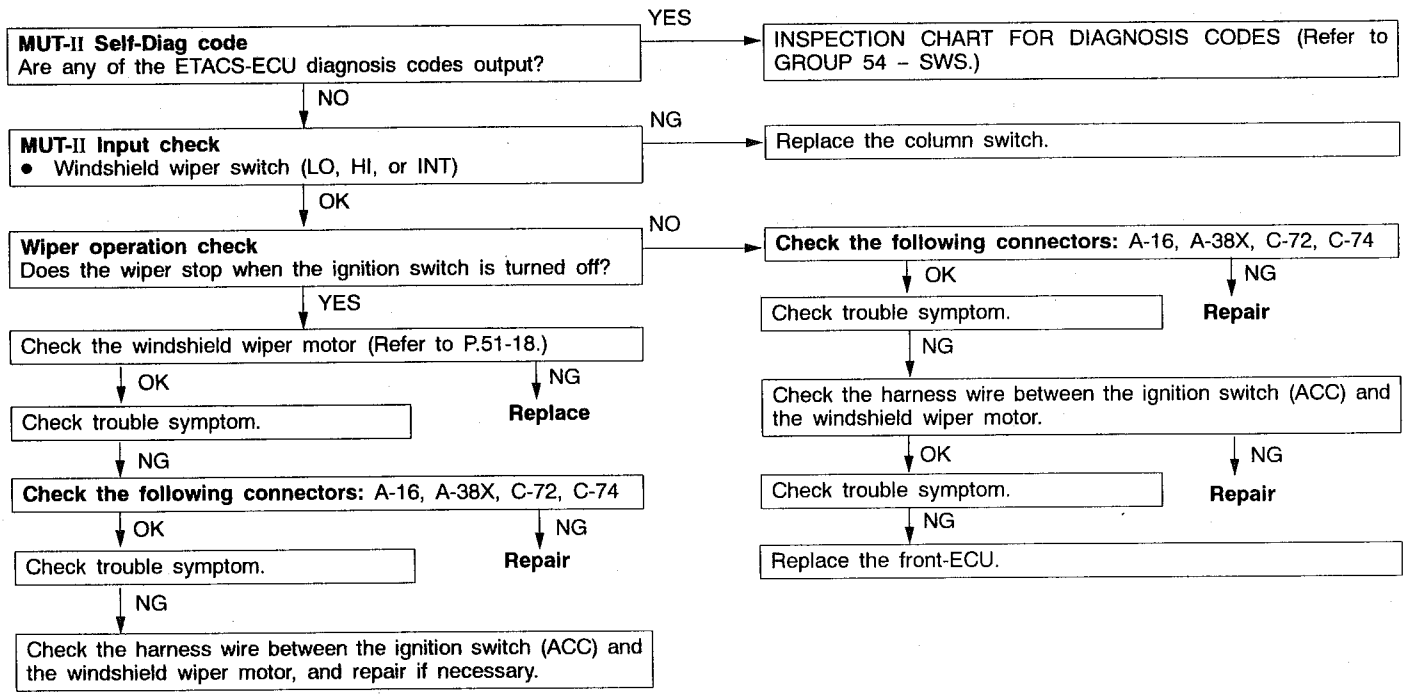

Inspection Procedure 6

The wipers do not stop at normal position when the wiper switch is turned off.	Probable cause
There can be a short circuit in the windshield wiper motor or a malfunction of fail-safe function at front-ECU.	• Malfunction of windshield wiper motor • Malfunction of wiring harness or connector • Malfunction of column switch • Malfunction of front-ECU

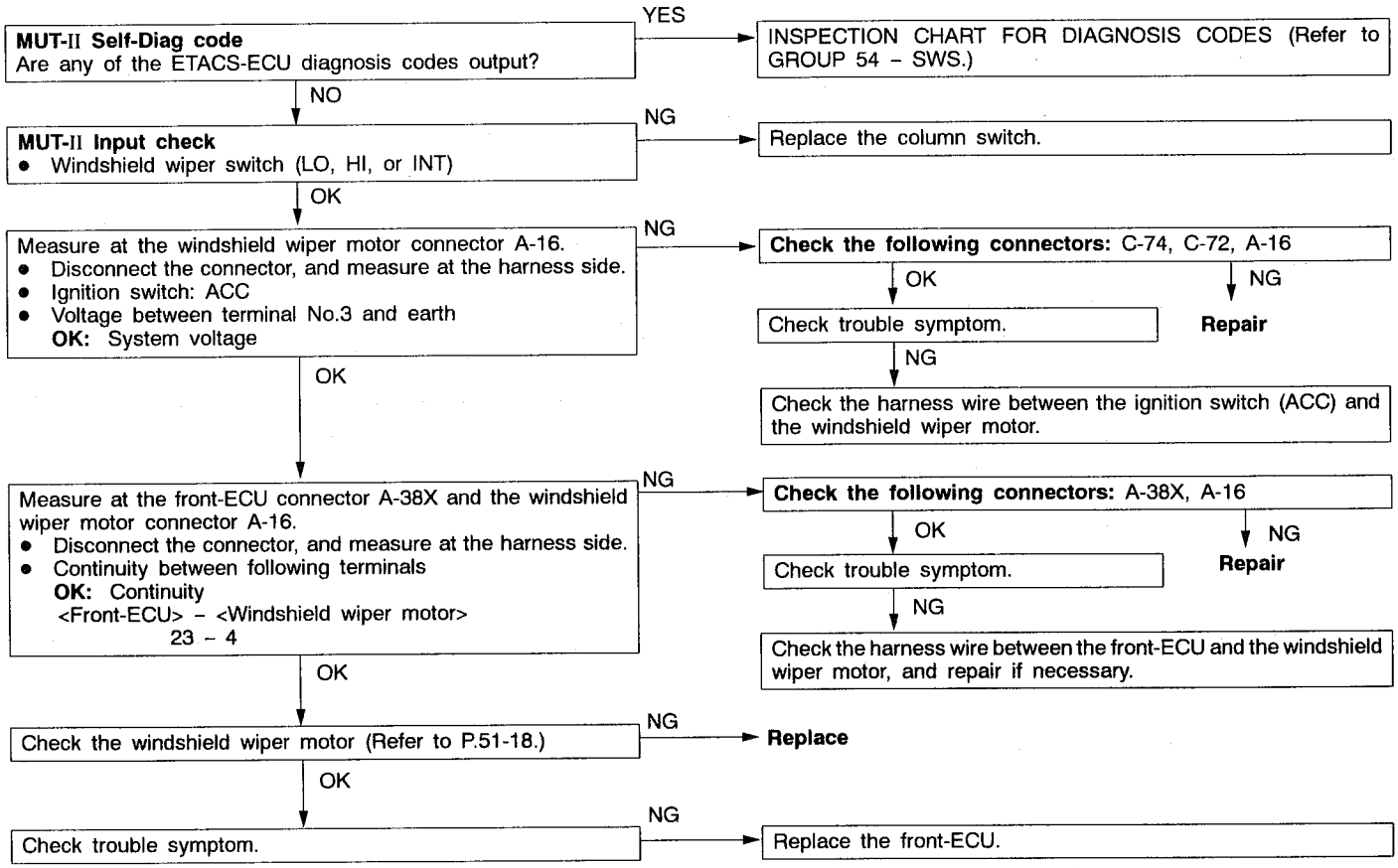

Inspection Procedure 7

The intermittent wiper speed does not vary when the variable speed switch is operated.	Probable cause
The cause may be a malfunction of the harness or connector, column switch or ETACS-ECU. The front-ECU may be normal as the wipers operate at the "LO", "HI", and "INT" modes.	• Malfunction of wiring harness or connector • Malfunction of column switch • Malfunction of ETACS-ECU

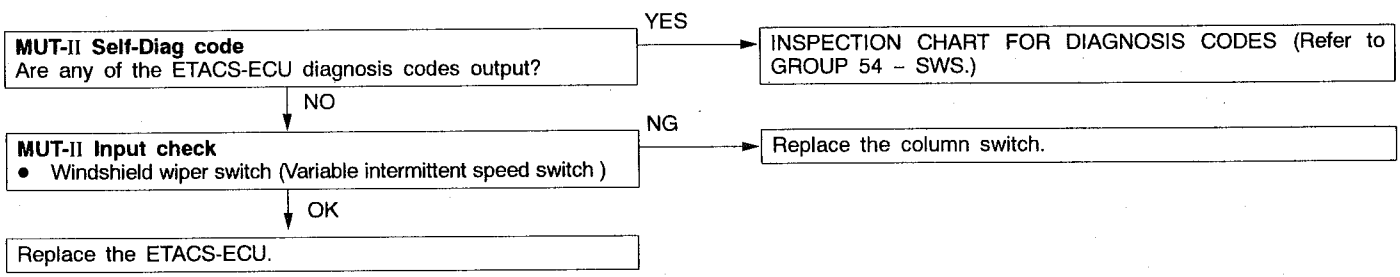

Inspection Procedure 8

The washers do not operate when the washer switch is operated. (However, the wipers operate normally.)	Probable cause
The cause may be a malfunction of the washer switch input circuit, harness or connector, windshield washer motor, or front-ECU.	• Malfunction of column switch • Malfunction of wiring harness or connector • Malfunction of windshield washer motor • Malfunction of front-ECU

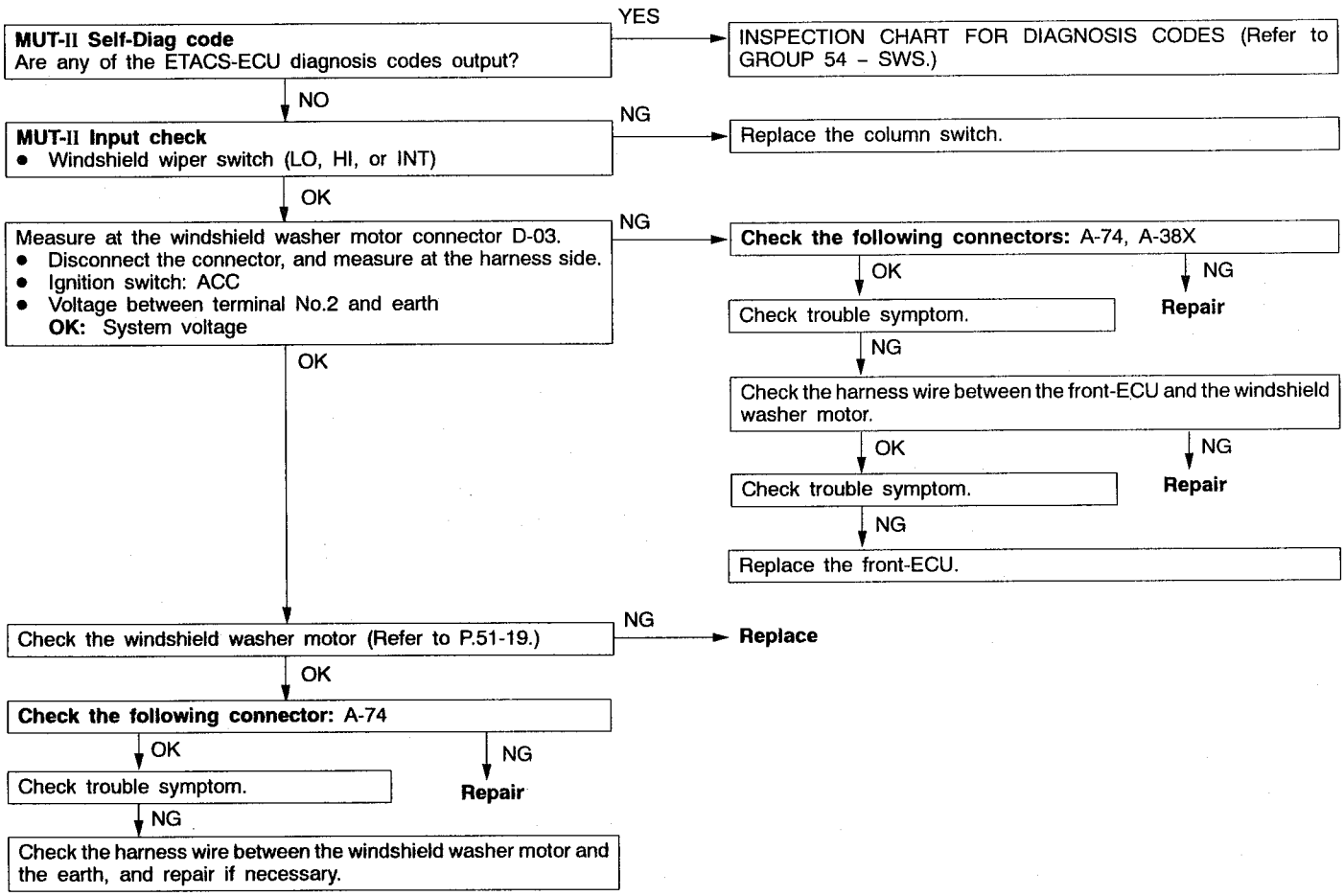

Inspection Procedure 9

The wipers do not operate when the washer switch is operated. (However, the washers operate normally.)	Probable cause
The cause may be a malfunction of the windshield wiper motor, harness or connector, or front-ECU.	• Malfunction of windshield wiper motor • Malfunction of wiring harness or connector • Malfunction of front-ECU

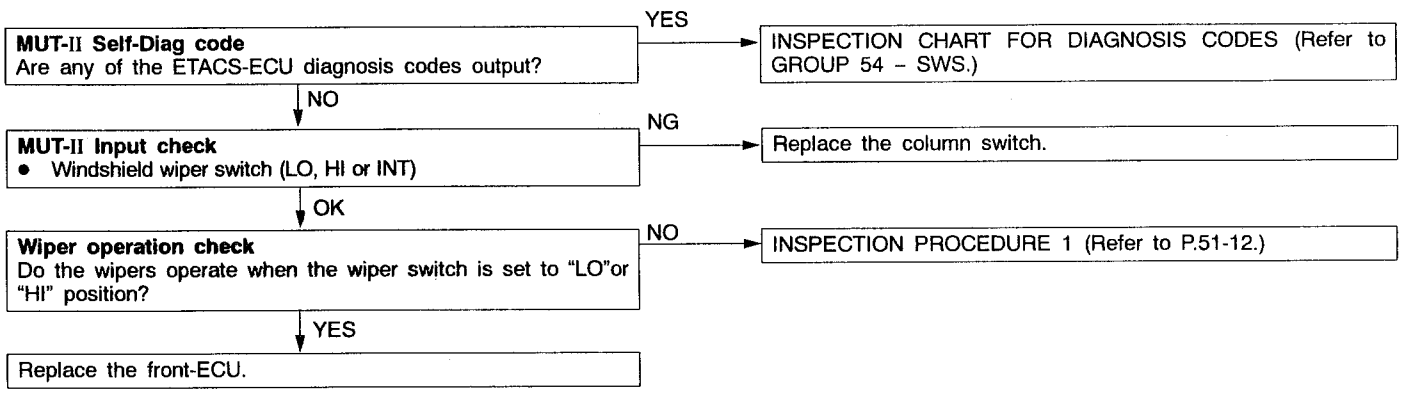

WINDSHIELD WIPER AND WASHER

REMOVAL AND INSTALLATION

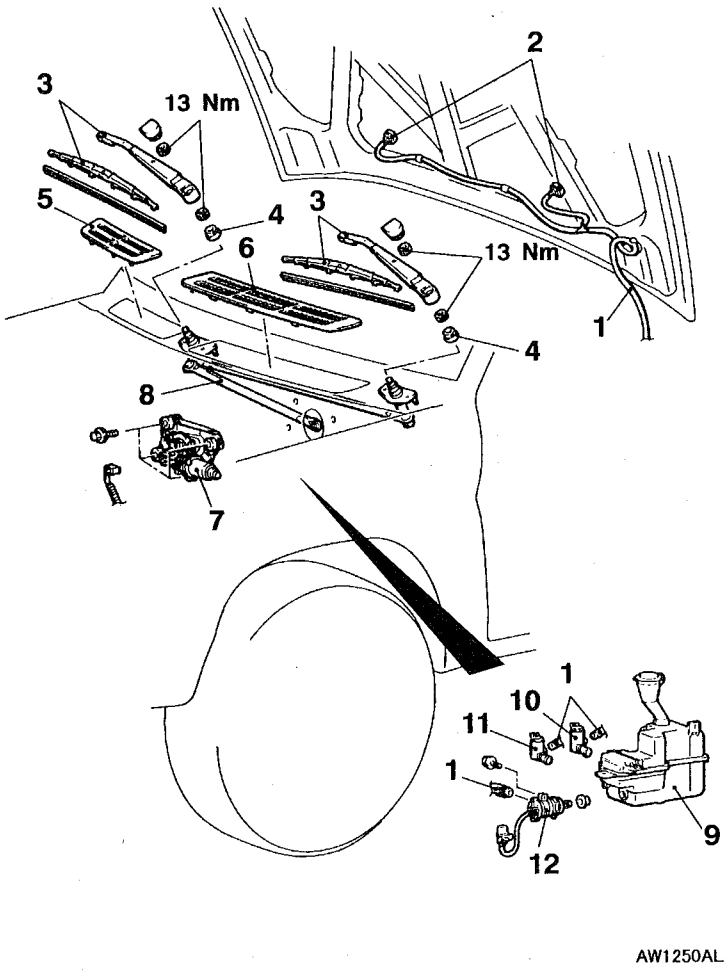

AW1250AL

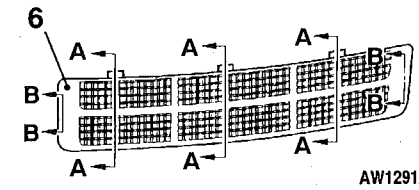

AW1291AL

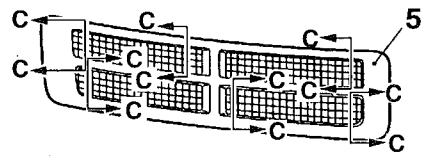

AW1271AL

Section A – A

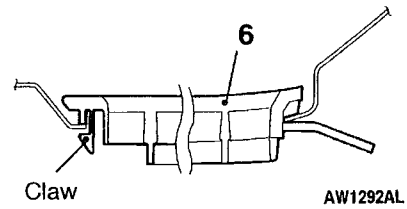

AW1292AL

Section B – B **Section C – C**

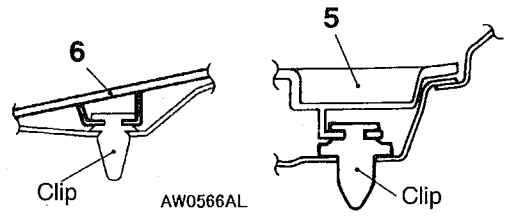

AW0566AL AW1272AL

1. Washer hose connection
2. Washer nozzle

Wiper motor and linkage removal steps

▶A◀ 3. Wiper arm and blade assembly
4. Washer
5. Front deck garnish <L.H. drive vehicles>
6. Front deck garnish <Driver's side>

◀A▶ 7. Wiper motor
8. Linkage assembly

Washer tank removal steps

- Air cleaner
- Intake duct

1. Washer hose connection
9. Headlamp washer motor (Vehicles with headlamp washer)
10. Front washer motor
11. Rear washer motor
12. Washer tank assembly

NOTE
For removal and installation of the column switch assembly (wiper and washer switch), refer to GROUP 37A – Steering Wheel and Shaft.

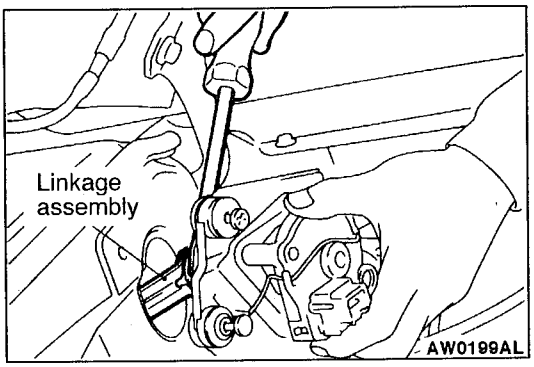

REMOVAL SERVICE POINT

◀A▶ WIPER MOTOR REMOVAL

1. Remove the wiper motor mounting bolts.
2. Use a flat-tipped screwdriver to separate the wiper motor crank arm from the linkage assembly, and then remove the wiper motor.

Caution
Because the installation angle of the crank arm and the wiper motor has been set, do not remove them unless it is necessary to do so. If they must be removed, remove them only after marking their mounting positions.

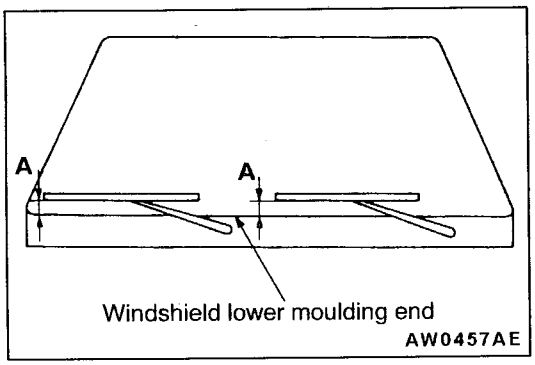

INSTALLATION SERVICE POINTS

▶A◀ WIPER ARM AND BLADE ASSEMBLY INSTALLATION

Install the wiper blade so that the wipers stops at the specified stop position (standard value) as shown in the illustration.

Standard value (A): 20 ± 5 mm

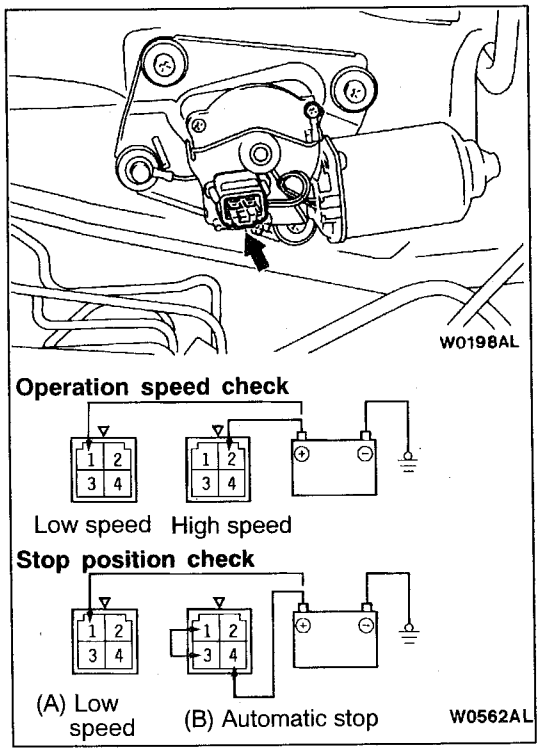

INSPECTION

WIPER MOTOR CHECK

Disconnect the wiring harness connector, and then check the wiper motor operation with the wiper motor remaining installed to the body.

Wiper Motor Operation Speed

Connect a battery to the wiper motor as shown in the illustration and check the operation speed.

Stop Position

1. Connect a battery to the wiper motor as shown in the (A) of the illustration. While the wiper motor operates at low speed, disconnect the battery to stop the wiper motor.
2. Connect the terminals via a jumper wire and a battery to the wiper motor as shown in the (B) of the illustration. After the motor starts turning at low speed, it should stop at the automatic stop position.

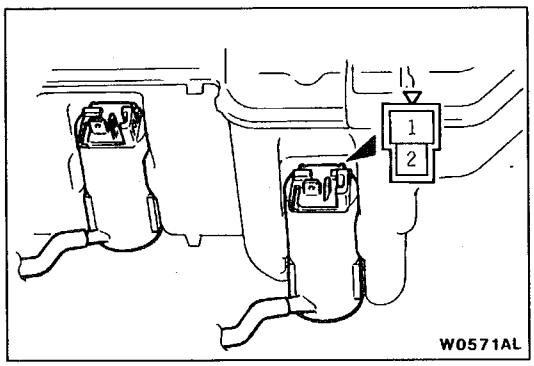

WASHER MOTOR CHECK

1. With the washer motor installed to the washer tank, fill the washer tank with water.
2. Check that the water squirts out strongly when battery voltage is applied to terminal (2) and terminal (1) is earthed.

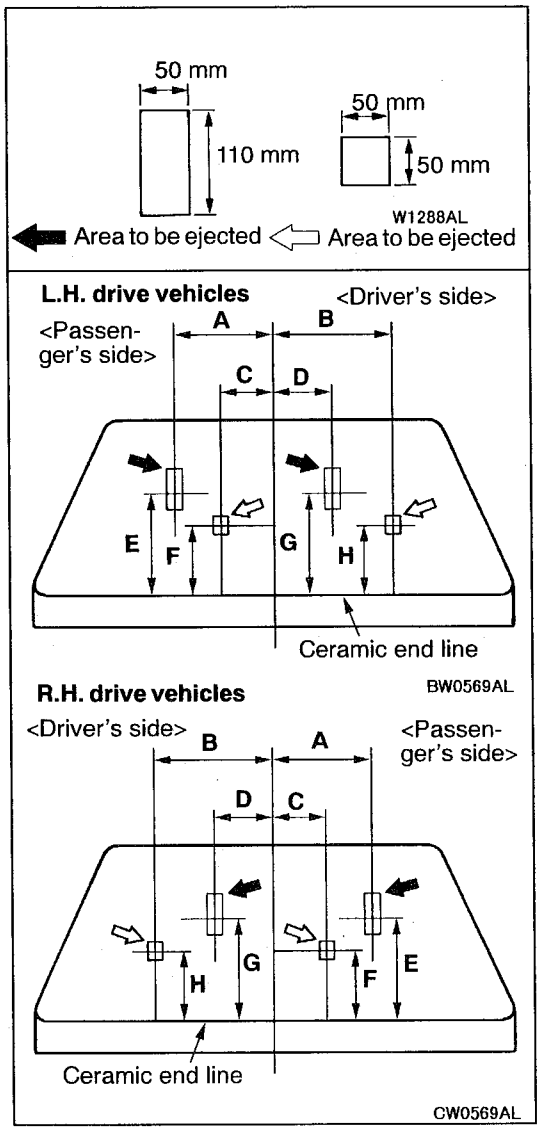

WASHER FLUID EJECTION POINT CHECK

Adjust the ejection angle by moving the nozzle.

Item	Distance mm	Item	Distance mm
A	350	E	310
B	475	F	200
C	165	G	320
D	200	H	200

REAR WIPER AND WASHER

SERVICE SPECIFICATION

Items	Standard value
Park position of rear wiper arm and blade assembly (Distance between wiper blade and back door glass ceramic end line) mm	33 ± 5

SPECIAL TOOLS

Tool	Number	Name	Use
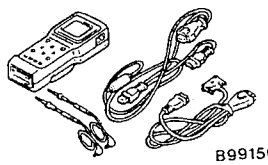 B991502	MB991502	MUT-II sub assembly	• Diagnosis code check • ETACS-ECU input signal check
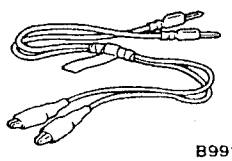 B991529	MB991529	Diagnosis code check harness	• Diagnosis code check • ETACS-ECU input signal check by using a voltmeter

TROUBLESHOOTING

DIAGNOSIS FUNCTION

INPUT SIGNAL INSPECTION PROCEDURE <ETACS>

1. Connect the MUT-II or a voltmeter to the diagnosis connector to check input signal. (Refer to GROUP 00 – How to Use Troubleshooting/Inspection Service Points.)
2. The following input signals can be checked:
   - Rear wiper switch
   - Rear washer switch

INSPECTION CHART FOR TROUBLE SYMPTOMS

Trouble symptom	Inspection procedure	Reference page
Communication with the MUT-II is impossible.	Refer to GROUP 54 – SWS.	
When the wiper switch is turned on, the wiper does not operate.	1	51-21
When the selector lever is moved to "R" position during the intermittent wiper operation, the wiper does not operate at the continuous mode.	2	51-22
When the wiper switch is turned off, the wiper does not stop.	3	51-23
When the wiper switch is turned off, the wiper does not stop at normal position.	4	51-24
When the washer switch is turned on, the washer does not operate.(However, the wiper operates normally.)	5	51-25
When the washer switch is turned on, the wiper does not operate.(However, the washer operates normally.)	6	51-25

INSPECTION PROCEDURE FOR TROUBLE SYMPTOMS

Inspection Procedure 1

When the wiper switch is turned on, the wiper does not operate.	Probable cause
The cause may be a malfunction of the wiper switch input circuit, harness or connector, rear wiper motor or ETACS-ECU.	• Malfunction of column switch • Malfunction of wiring harness or connector • Malfunction of rear wiper motor • Malfunction of ETACS-ECU

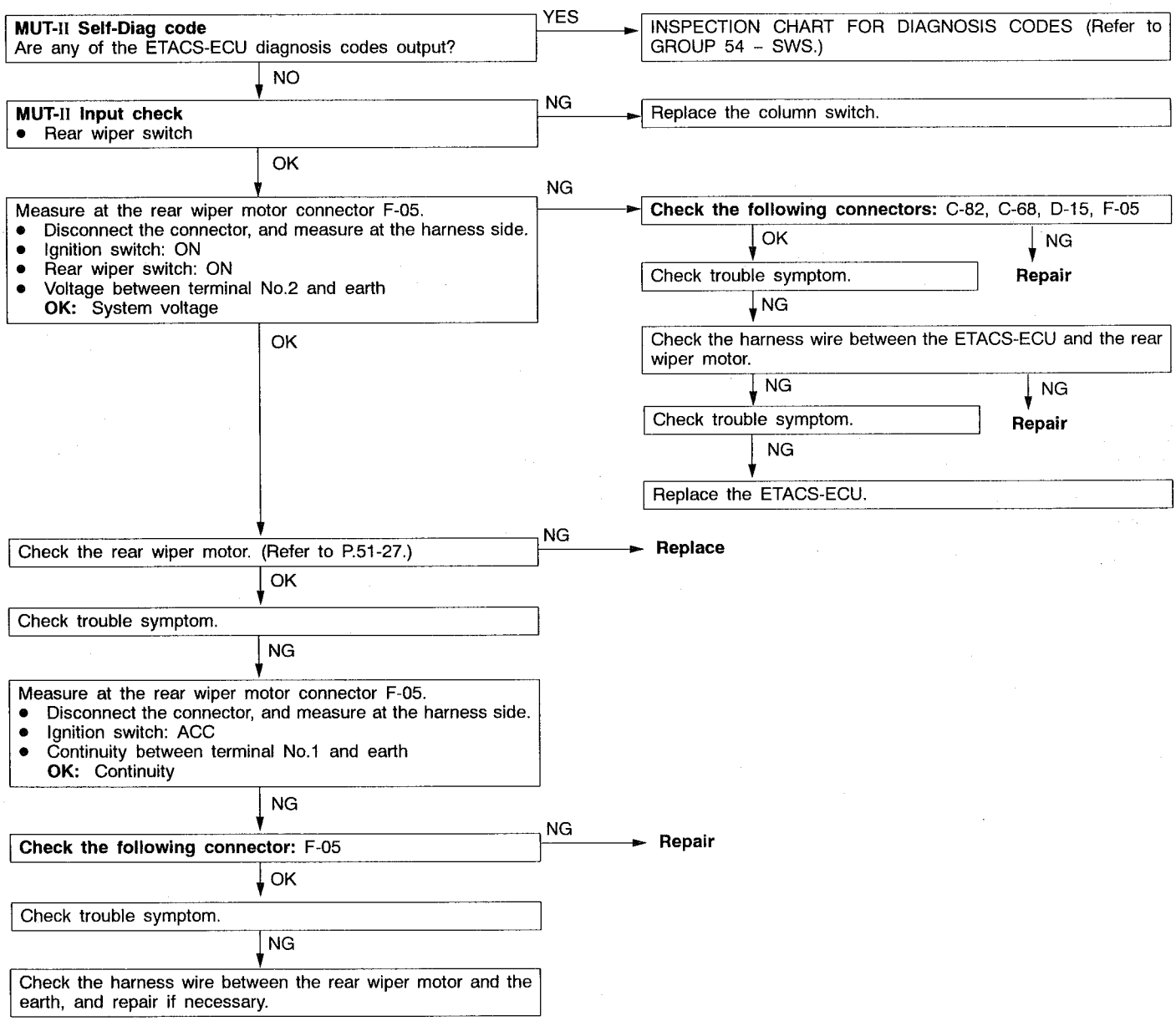

Inspection Procedure 2

When the selector lever is moved to "R" position during the intermittent wiper operation, the wiper does not operate at the continuous mode.	Probable cause
The cause may be a malfunction of the "R" position input circuit or ETACS-ECU.	• Malfunction of back-up lamp switch <M/T> • Malfunction of inhibitor switch <4A/T> • Malfunction of wiring harness or connector • Malfunction of ETACS-ECU

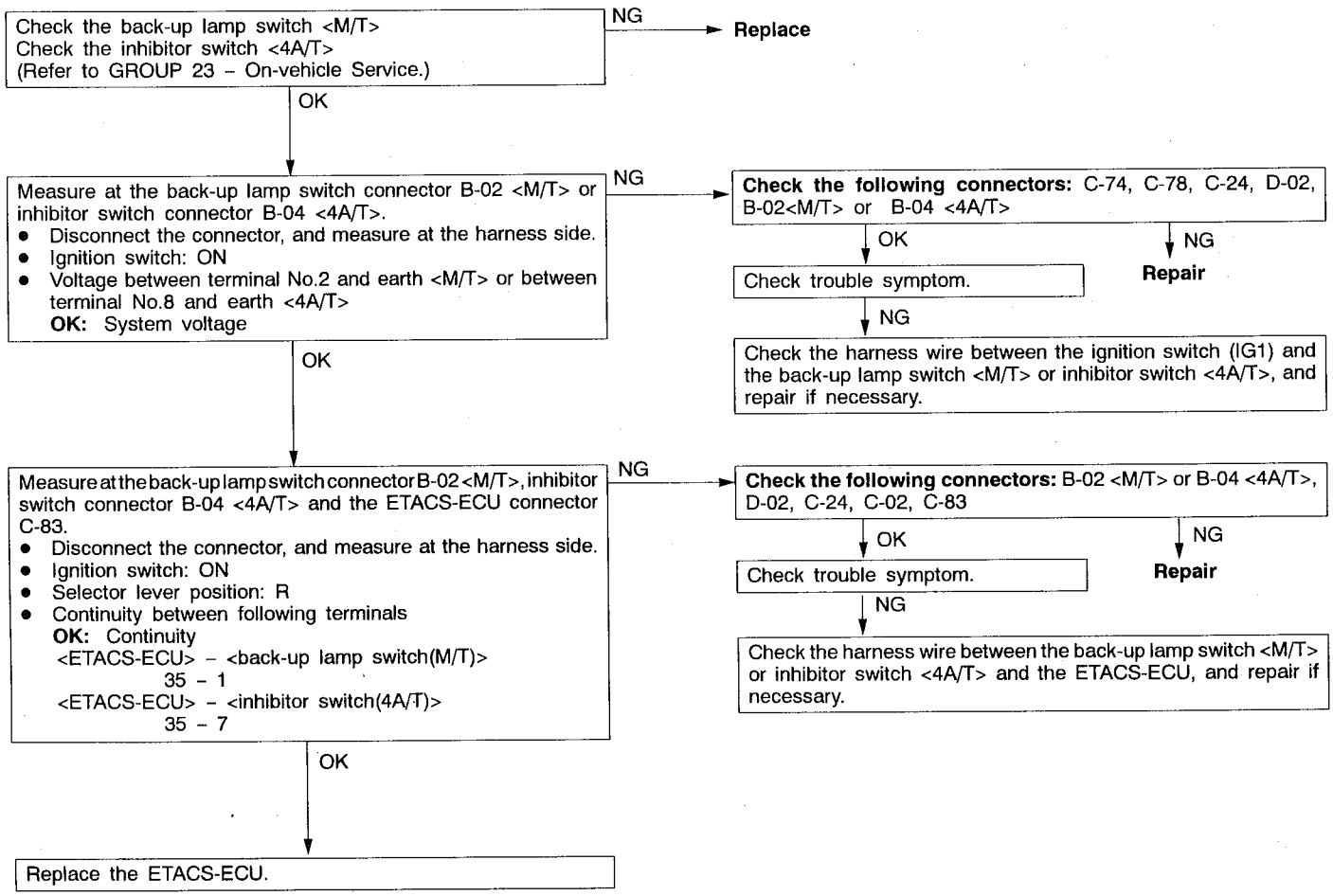

Inspection Procedure 3

When the wiper switch is turned off, the wiper does not stop.	Probable cause
There can be a short circuit in harness or the rear wiper motor, a malfunction of the column switch or the ETACS-ECU.	• Malfunction of rear wiper motor • Malfunction of wiring harness or connector • Malfunction of column switch • Malfunction of ETACS-ECU

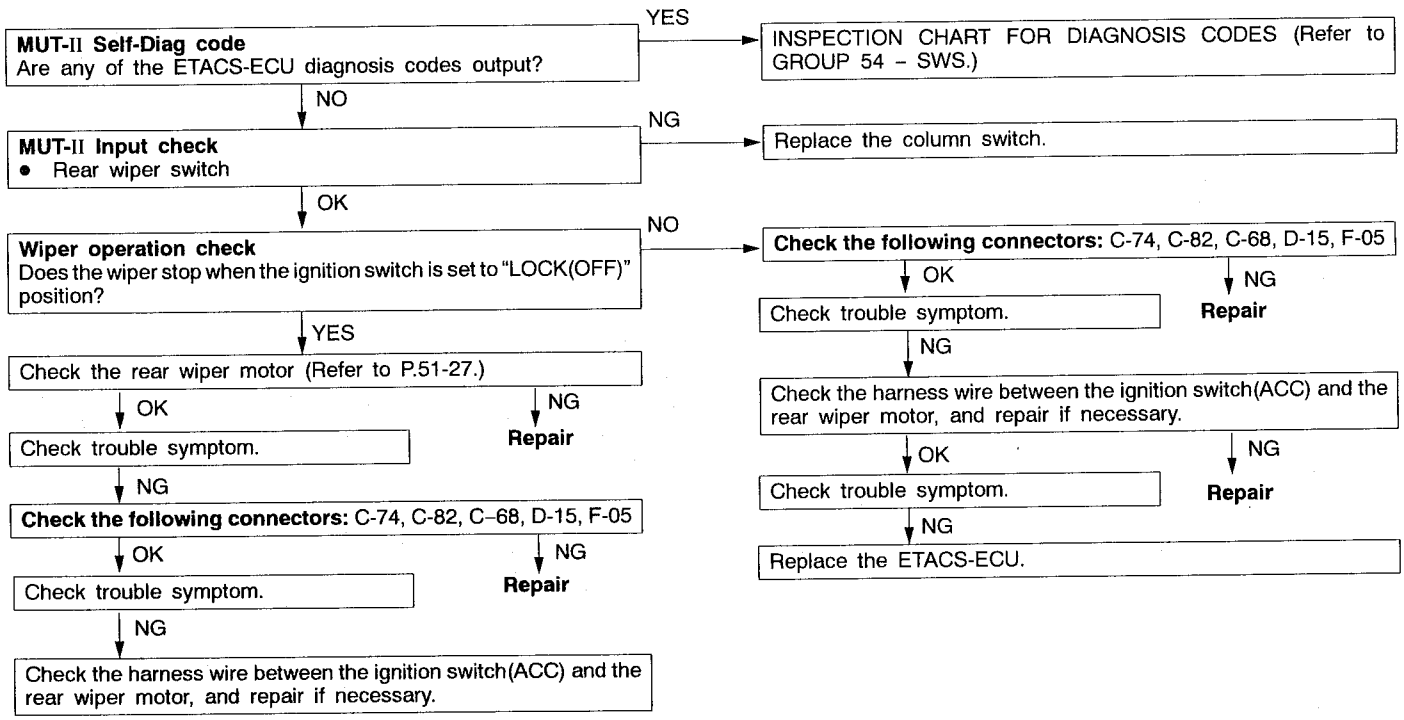

Inspection Procedure 4

When the wiper switch is turned off, the wiper does not stop at normal position.	Probable cause
There can be a short circuit in the rear wiper motor or a malfunction of the ETACS-ECU.	• Malfunction of rear wiper motor • Malfunction of wiring harness or connector • Malfunction of column switch • Malfunction of ETACS-ECU

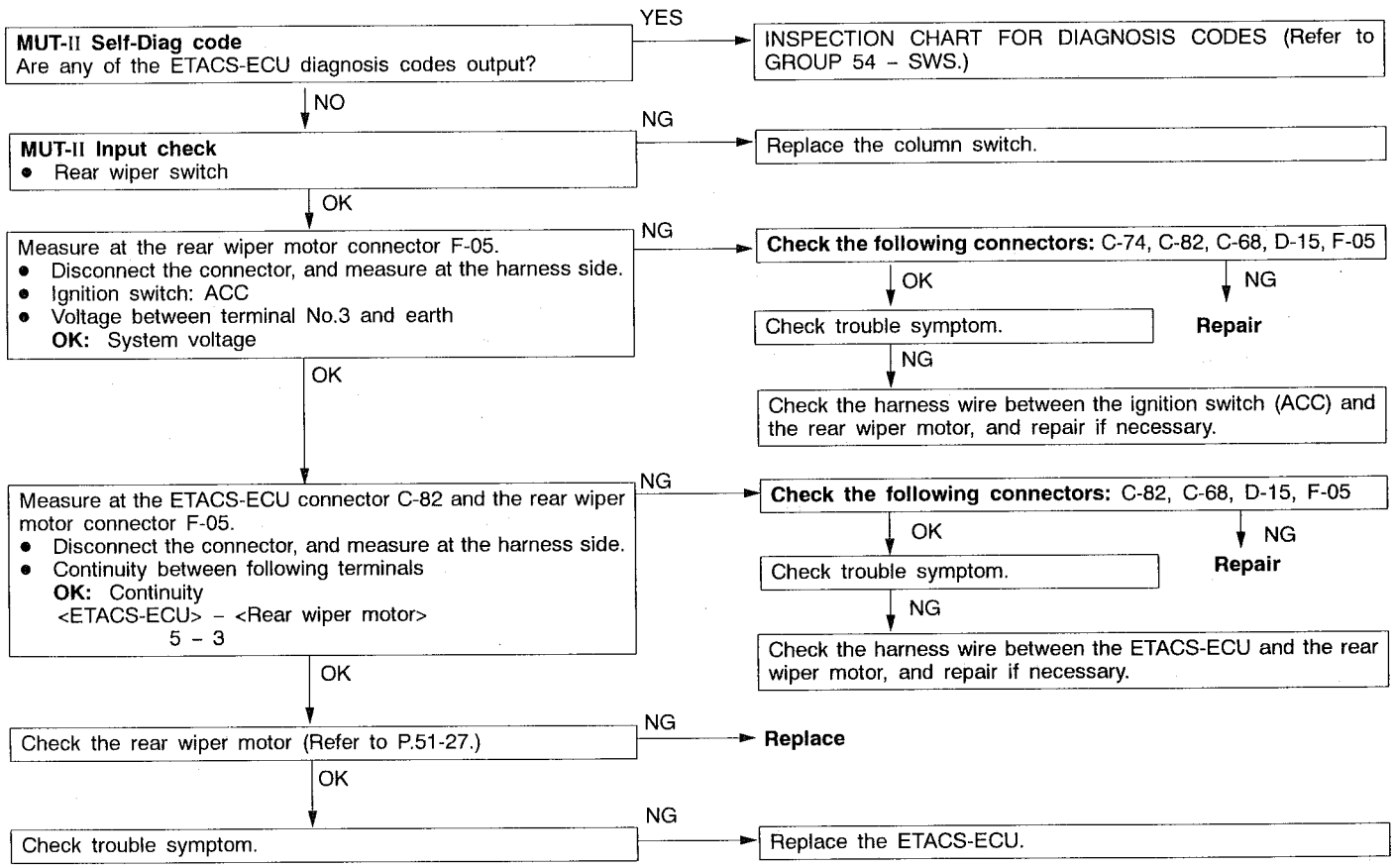

Inspection Procedure 5

When the washer switch is turned on, the washer does not operate.(However, the wiper operates normally.)	Probable cause
The cause may be a malfunction of the rear washer switch input circuit, harness or connector, rear washer motor, or ETACS-ECU.	• Malfunction of column switch • Malfunction of wiring harness or connector • Malfunction of rear washer motor • Malfunction of ETACS-ECU

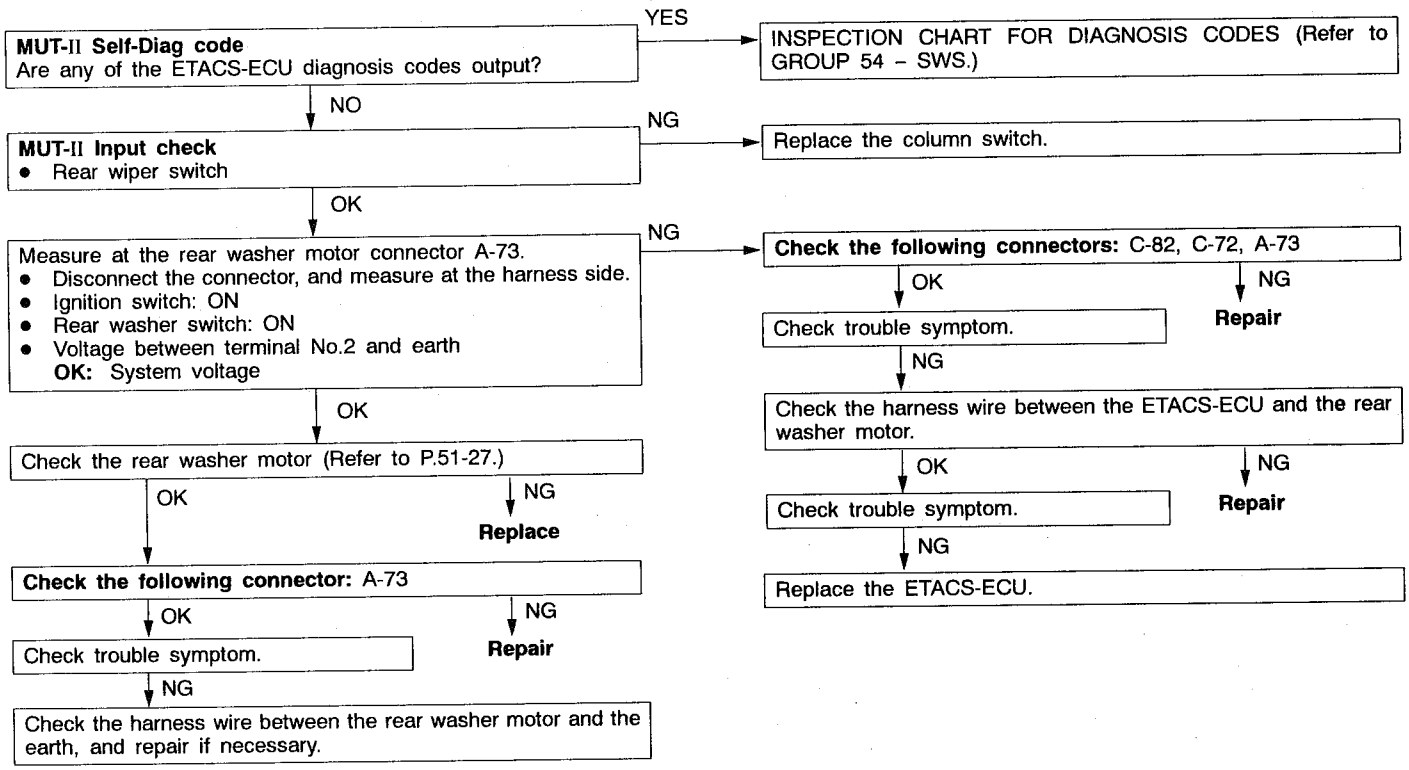

Inspection Procedure 6

When the washer switch is turned on, the wiper does not operate.(However, the washer operates normally.)	Probable cause
The cause may be a malfunction of the rear wiper motor, harness, connector or ETACS-ECU.	• Malfunction of rear wiper motor • Malfunction of wiring harness or connector • Malfunction of ETACS-ECU

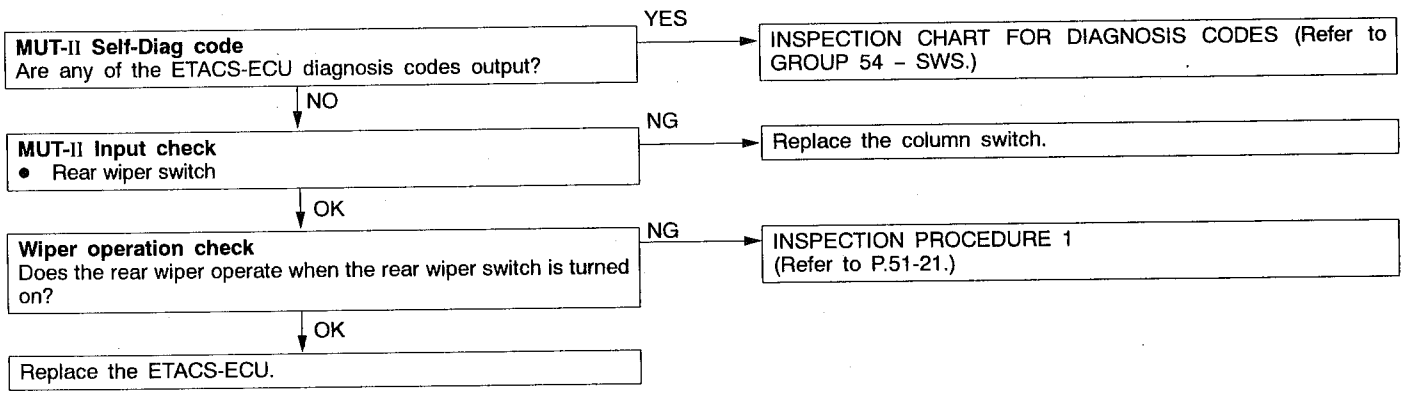

REAR WIPER AND WASHER

REMOVAL AND INSTALLATION

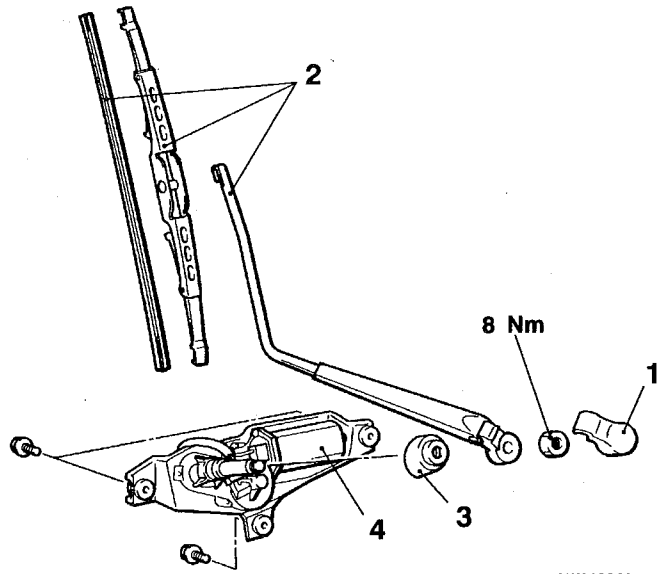

AW0193AL

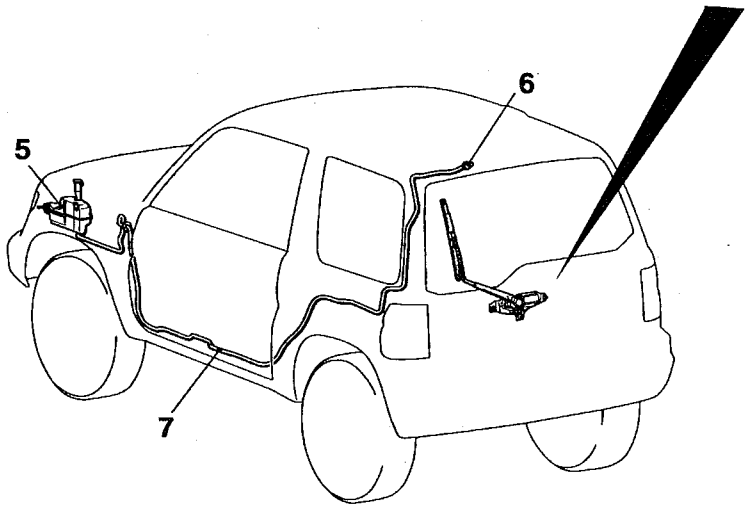

AW0192AL

Wiper motor assembly removal steps

- Back door trim (Refer to GROUP 42.)

1. Cover
2. ▶A◀ Wiper arm and blade assembly
3. ▶B◀ Grommet
4. Wiper motor assembly

Washer tank and washer motor removal

5. Washer tank and washer motor (Refer to P.51-17.)

Rear washer hose removal steps

- Rear seat (Refer to GROUP 52A.)
- Scuff plate and quarter trim (Refer to GROUP 52A.)
- Headlining (Refer to GROUP 52A)

6. Washer nozzle
7. Washer hose

NOTE
For removal and installation of the column switch assembly (wiper and washer switch), refer to GROUP 37A – Steering Wheel and Shaft.

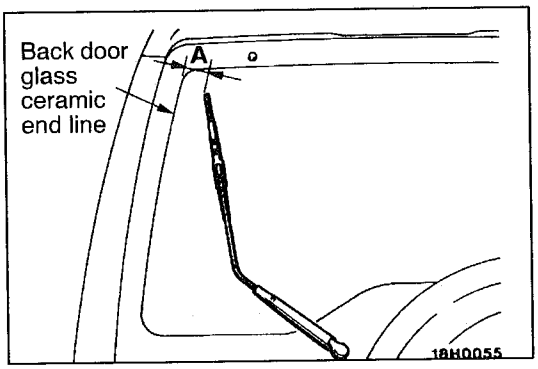

INSTALLATION SERVICE POINT

▶A◀ WIPER ARM AND BLADE ASSEMBLY INSTALLATION

Install so that the wiper blade is positioned at the shown position when the wiper arm stops.

Standard value (A): 33 ± 5 mm

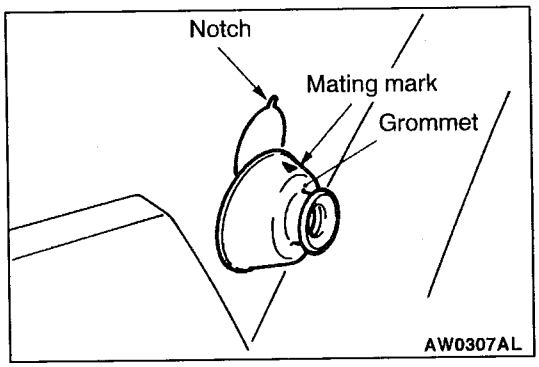

▶B◀ GROMMET INSTALLATION

Align the mating mark of grommet and the notch of installation hole.

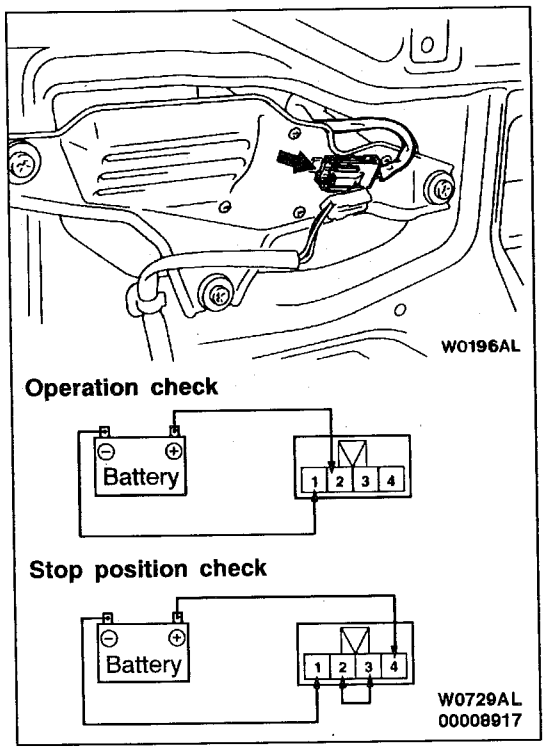

INSPECTION

WIPER MOTOR CHECK

Disconnect the wiring harness connector, and check the wiper motor operation with the wiper motor remaining installed to the body.

Wiper Motor Operation

Connect a battery to the wiper motor as shown in the illustration and check the motor operation.

Wiper Motor Stop Position

1. Operate the wiper motor, and then disconnect the battery to stop the wiper motor while the wiper motor is operating.
2. Reconnect the battery as shown in the illustration, and confirm that after the motor starts turning, it stops at the automatic stop position.

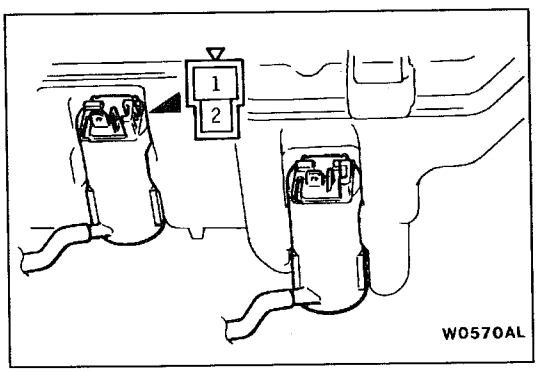

WASHER MOTOR CHECK

1. With the washer motor installed to the washer tank, fill the washer tank with water.
2. Check that the water squirts out strongly when system voltage is applied to terminal 2 and terminal 1 is earthed.

HEADLAMP WASHER <Vehicles except for Hong Kong>

SPECIAL TOOLS

Tool	Number	Name	Use
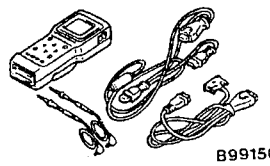 B991502	MB991502	MUT-II sub assembly	• Diagnosis code check • ETACS-ECU input signal check
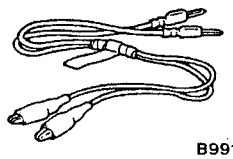 B991529	MB991529	Diagnosis code check harness	• Diagnosis code check • ETACS-ECU input signal check by using a voltmeter

TROUBLESHOOTING

DIAGNOSIS FUNCTION

INPUT SIGNAL INSPECTION PROCEDURE

1. Connect the MUT-II or a voltmeter to the diagnosis connector to check input signal. (Refer to GROUP 00 – How to Use Troubleshooting/Inspection Service Points.)
2. The headlamp washer switch input signal can be checked:

INSPECTION CHART FOR TROUBLE SYMPTOMS

Trouble symptom	Inspection procedure	Reference page
Communication with MUT-II is not possible.	Refer to GROUP 54 – SWS.	
Headlamp washer does not operate when the headlamp washer switch is turned on (when headlamp is illuminated).	1	51-29

INSPECTION PROCEDURE FOR TROUBLE SYMPTOMS

Inspection Procedure 1

Headlamp washer does not operate when the headlamp washer switch is turned on (when headlamp is illuminated).	Probable cause
The cause may be a malfunction of the headlamp washer switch input circuit, wiring harness or connector, headlamp washer motor and of the front-ECU.	• Malfunction of column switch • Malfunction of wiring harness or connector • Malfunction of headlamp washer motor • Malfunction of front-ECU

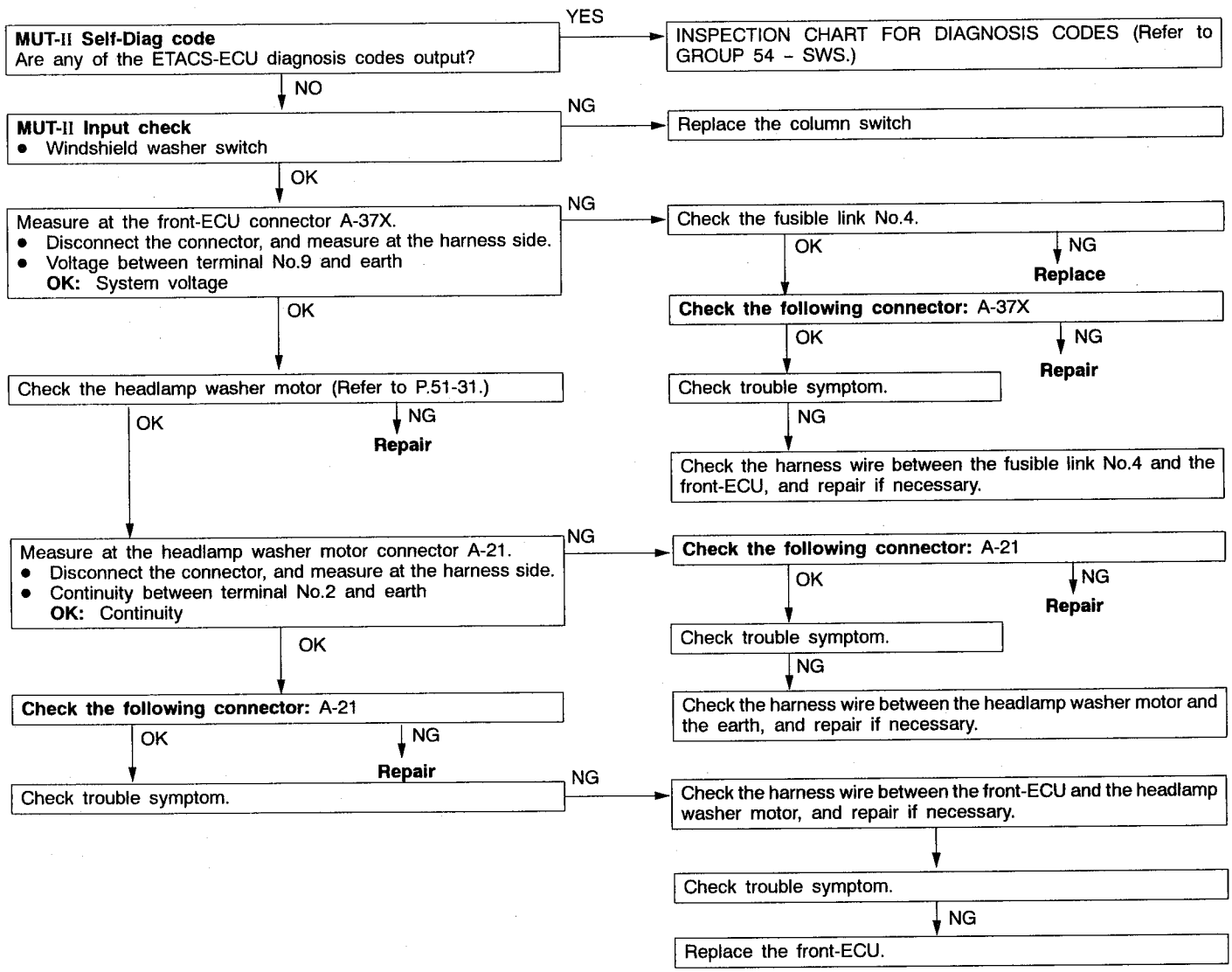

HEADLAMP WASHER

REMOVAL AND INSTALLATION

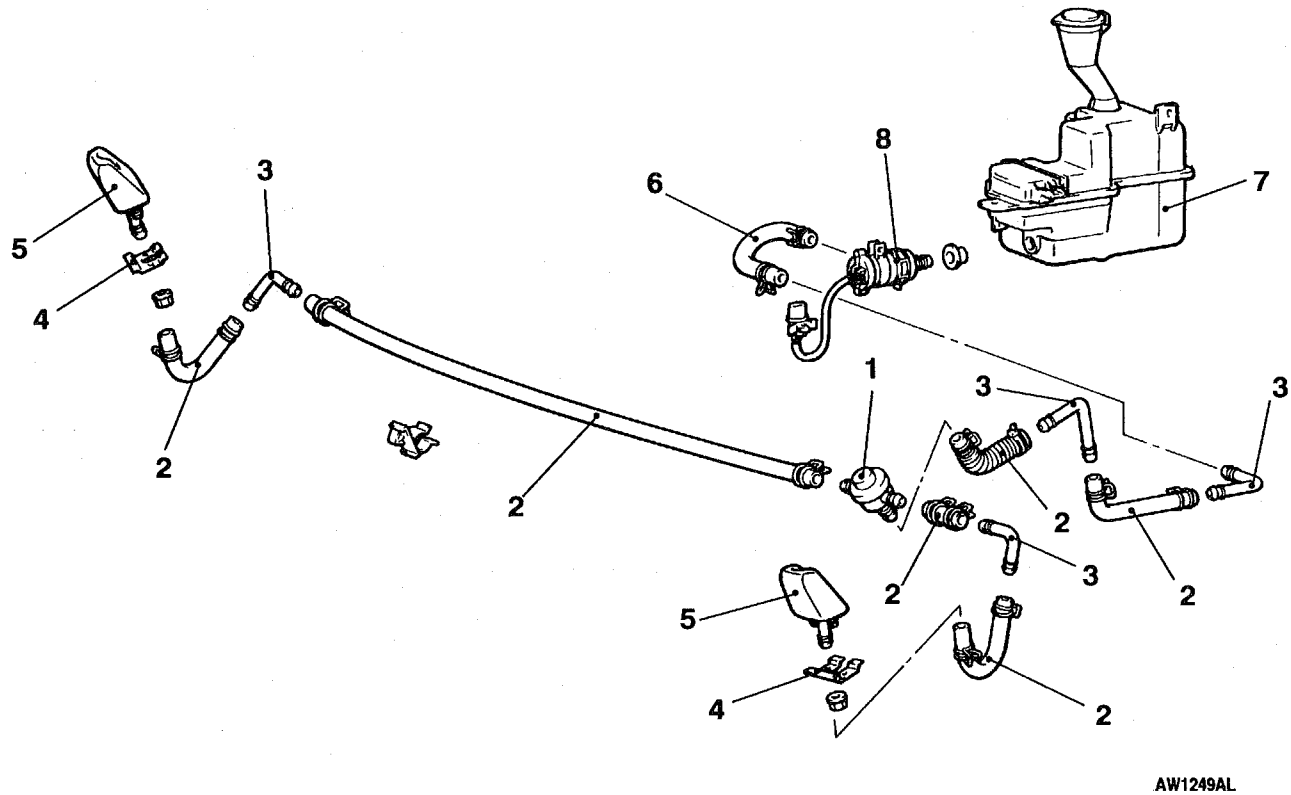

Nozzle and check valve removal steps

- Draining of washer fluid
- Front bumper (Refer to P.51-2.)

1. Check valve
2. Washer hose
3. Joint
4. Bracket
5. Nozzle

Washer tank removal steps

- Draining of washer fluid
- Air cleaner
- Intake duct

6. Washer hose
7. Washer tank assembly
8. Headlamp washer motor

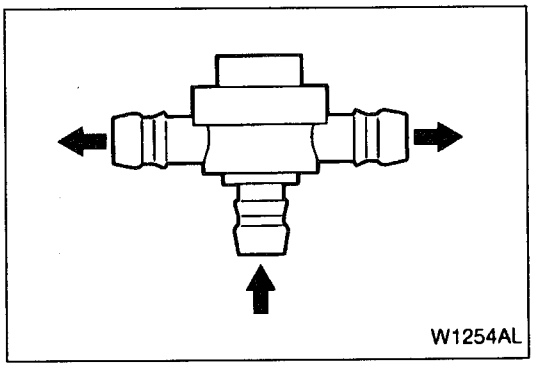
W1254AL

INSPECTION

CHECK VALVE CHECK

Apply pressure to the inlet of the check valve to check its opening pressure.

Opening pressure: 78 kPa

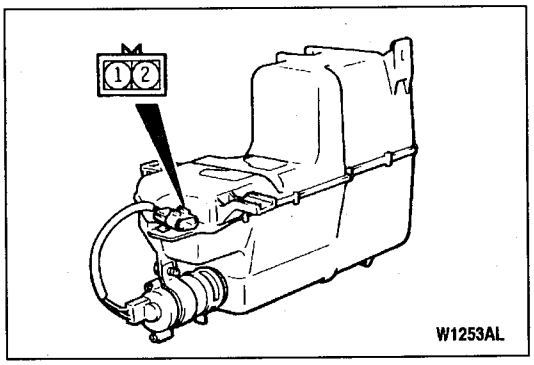

W1253AL

HEADLAMP WASHER MOTOR CHECK

1. With the washer motor installed to the washer tank, fill the washer tank with water.
2. Connect battery (+) and (–) cables to terminals (1) and (2) respectively to see that the washer motor runs and water is injected.

MARKS

REMOVAL AND INSTALLATION

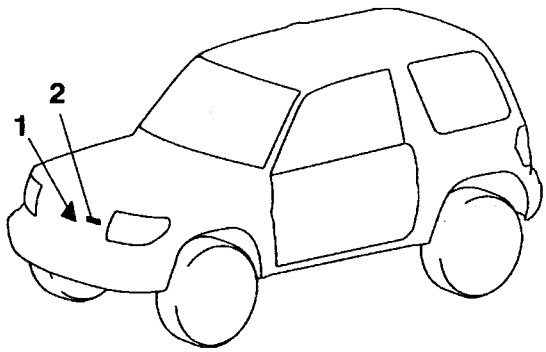

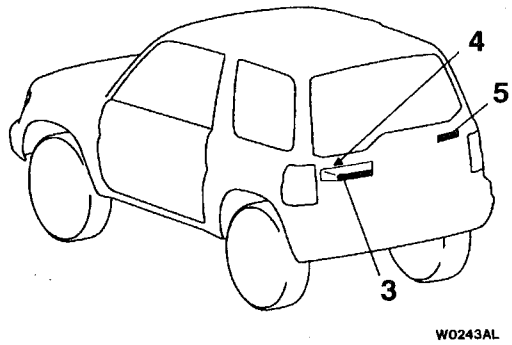

1. Three diamonds mark
2. "GDI" mark
   <Vehicles for Hong Kong>
▶A◀ 3. Vehicle name decal
▶A◀ 4. Three diamonds mark
   <Vehicles for Central and South America counties, Hong Kong>
▶A◀ 5. "GDI" mark
   <Vehicles for Hong Kong>

INSTALLATION SERVICE POINT

▶A◀ INSTALLATION OF MARKS

1. APPLICATION POSITION

(3) Vehicle name decal

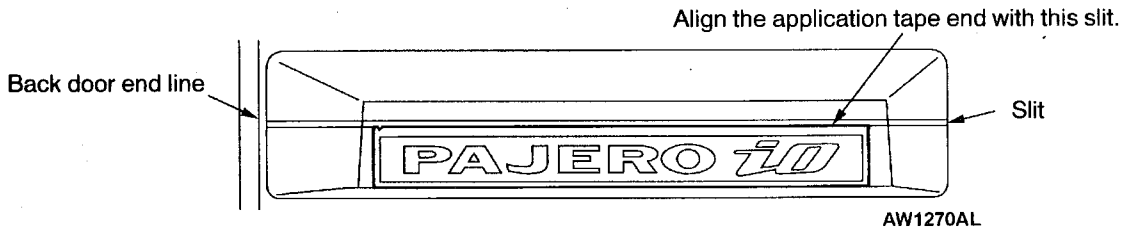

(4) Three diamonds mark

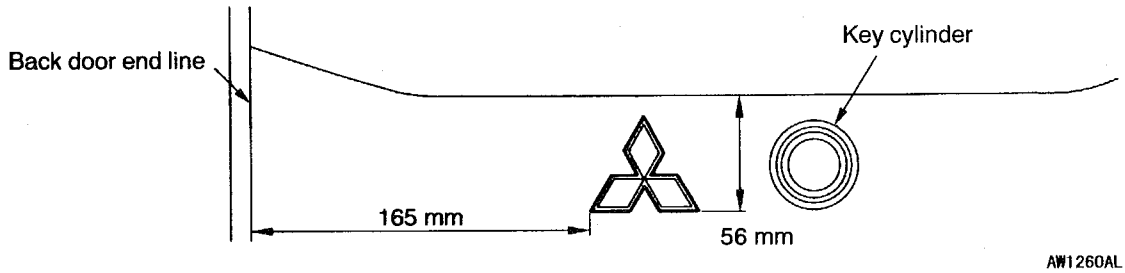

(5) GDI mark

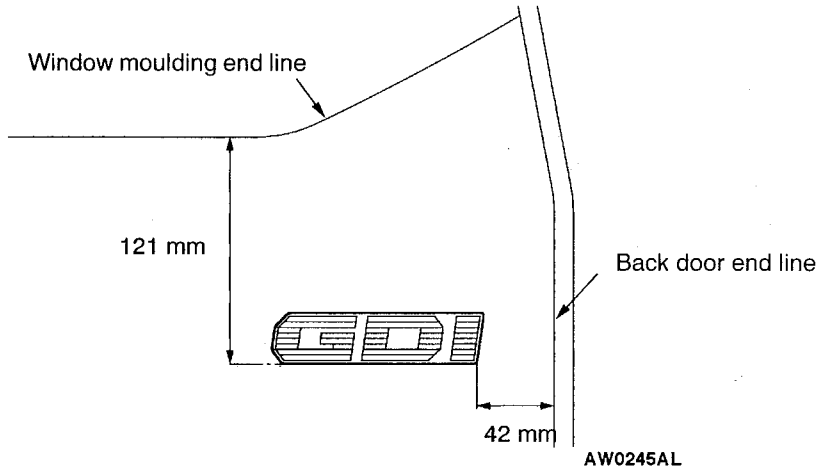

2. INSTALLATION PROCEDURE

(1) Clean the mark installation surfaces on the body with unleaded petrol.

(2) Peel off the backing paper from the reverse side of the marks, and then attach the marks to the vehicle body so that they fit properly into position.

Caution
When attaching the marks, the surrounding temperature should be 20–38°C and the air should be completely free from dust.
If the surrounding temperature is lower than 20°C, the marks and the places on the body where the marks are to be attached should be heated to 20–38°C.

OUTSIDE DOOR MIRROR

SPECIAL TOOLS

Tool	Number	Name	Use
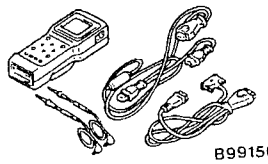 B991502	MB991502	MUT-II sub assembly	ETACS-ECU input signal check
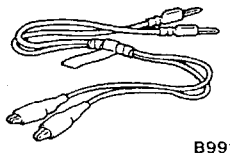 B991529	MB991529	Diagnosis code check harness	ETACS-ECU input signal check by using a voltmeter

TROUBLESHOOTING

DIAGNOSIS FUNCTION

INPUT SIGNAL INSPECTION PROCEDURE <VEHICLES WITH ETACS-ECU>

1. Connect the MUT-II or a voltmeter to the diagnosis connector to check input signal. (Refer to GROUP 00 – How to Use Troubleshooting/Inspection Service Points.)
2. The door mirror retracting switch input signal can be checked:

NOTE
If the input signal can not be checked by MUT-II, the cause is probably a malfunction of the diagnosis circuit system.

INSPECTION CHART FOR TROUBLE SYMPTOMS

Trouble symptom	Inspection procedure	Reference page
Communication with MUT-II is not possible.	Refer to GROUP 54 – SWS.	
When the door mirror retracting switch is pressed, the door mirrors do not retract or return to the original positions.	1	51-35

INSPECTION PROCEDURE FOR TROUBLE SYMPTOMS

Inspection Procedure 1

When the door mirror retracting switch is pressed, the door mirrors do not retract or return to the original positions.	Probable cause
The electric remote-controlled mirror switch input circuit, harness and connector, or the ETACS-ECU may be defective. In addition, if the door mirror is moved due to a contact with a person or object, the door mirror may not operate correctly in rare case.	• Malfunction of electric remote-controlled mirror switch • Malfunction of retracting motor • Malfunction of ETACS-ECU • Malfunction of wiring harness or connector

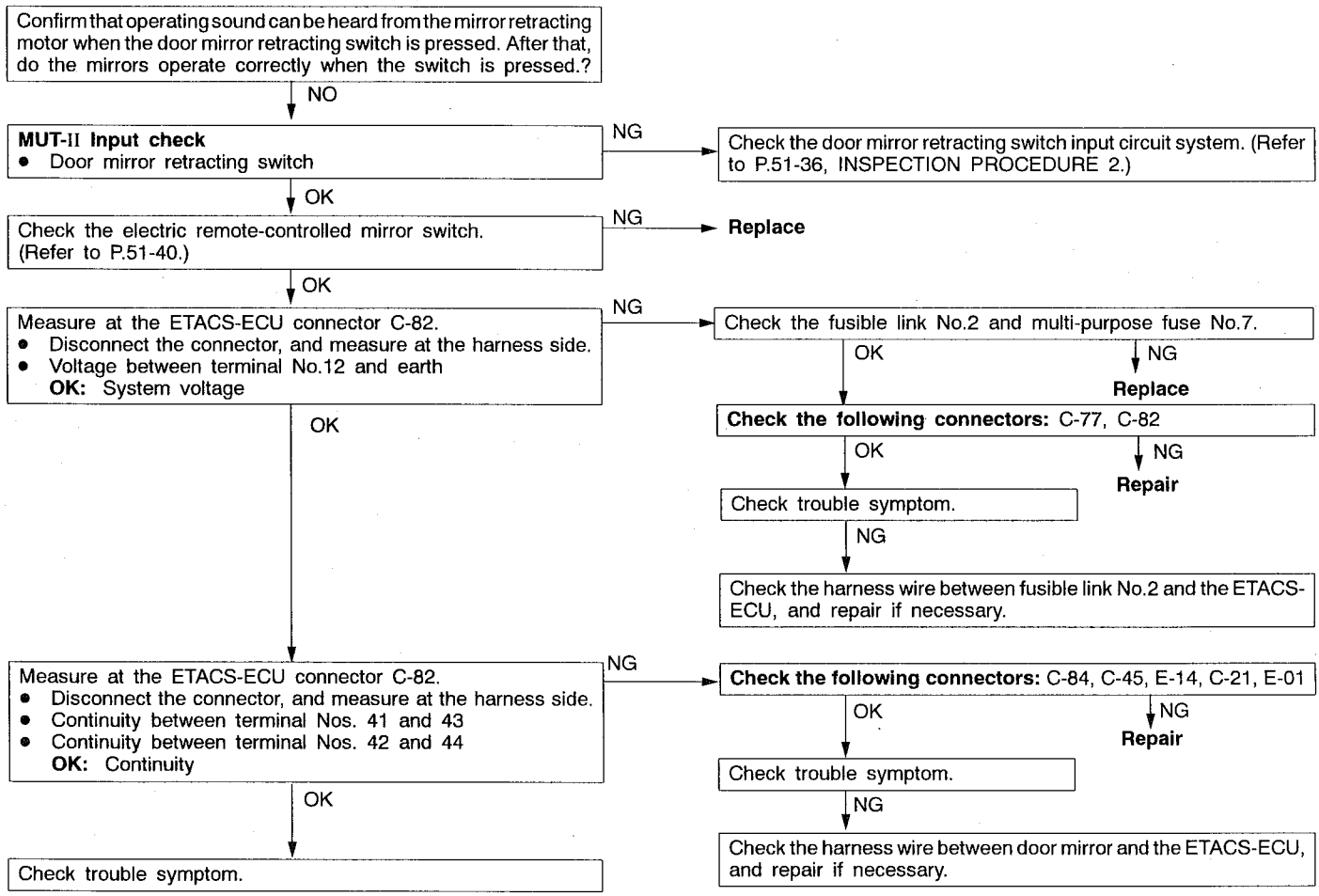

Inspection Procedure 2

Door mirror retracting switch input circuit check

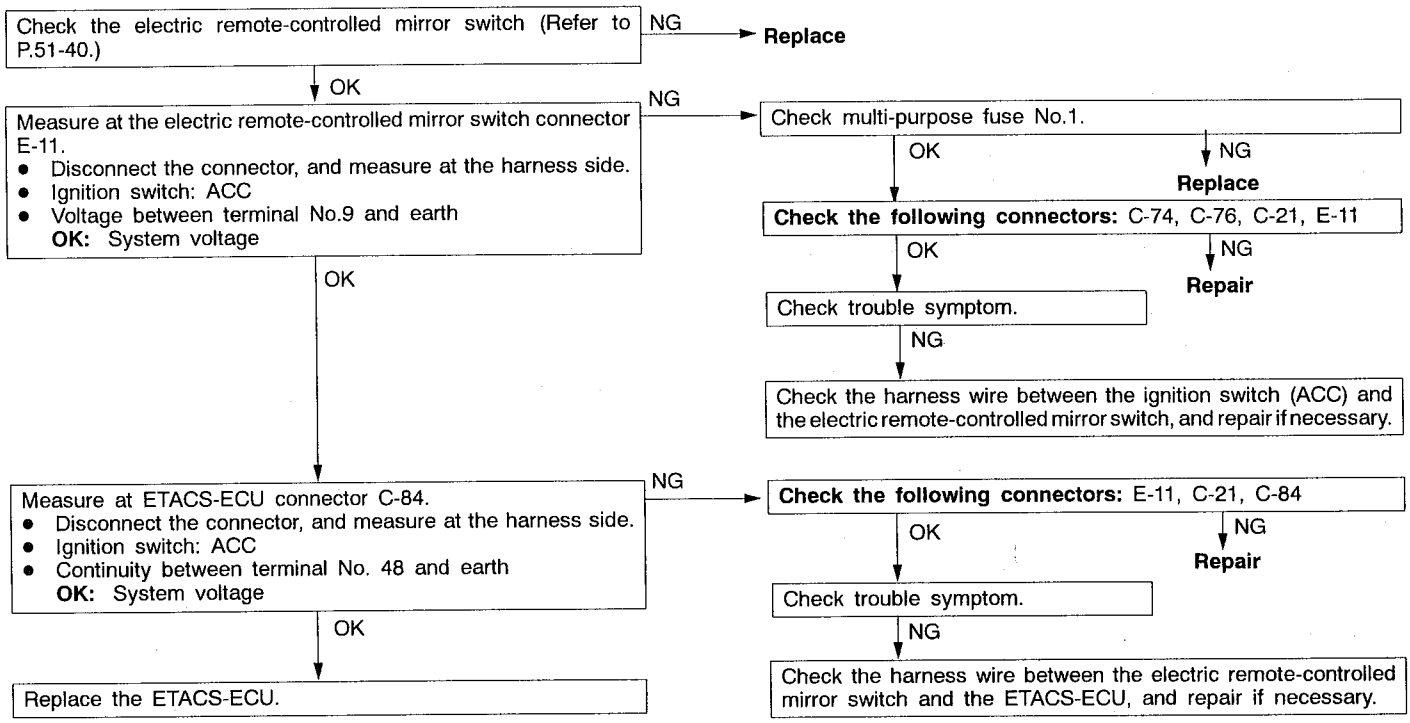

OUTSIDE DOOR MIRROR

REMOVAL AND INSTALLATION

<Electric retractable and remote-controlled door mirror>

<Manual-controlled door mirror >

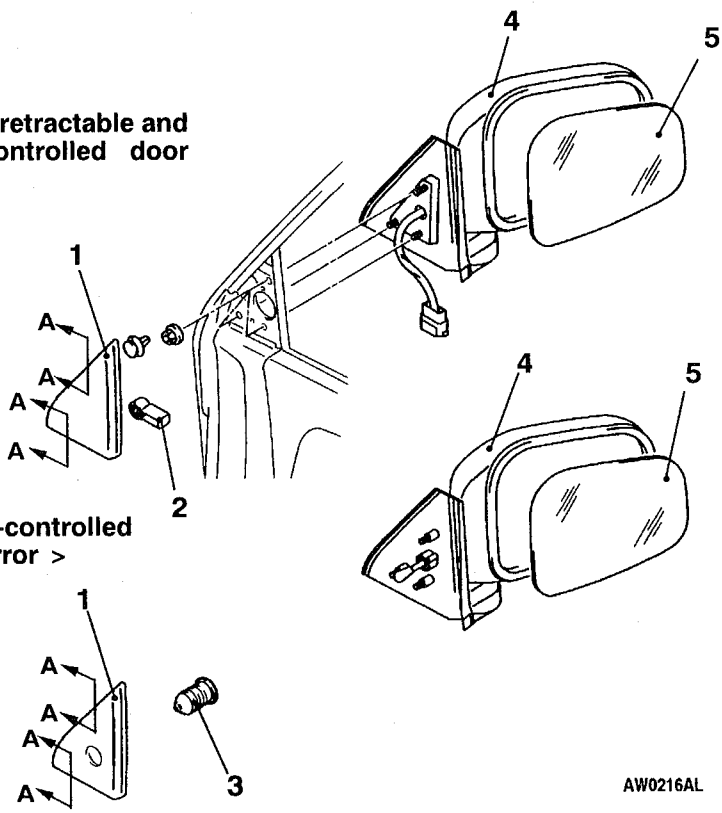

AW0216AL

Section A – A

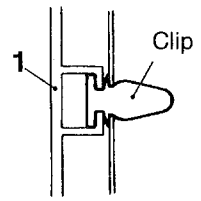

AW0737AL

<Side under mirror>

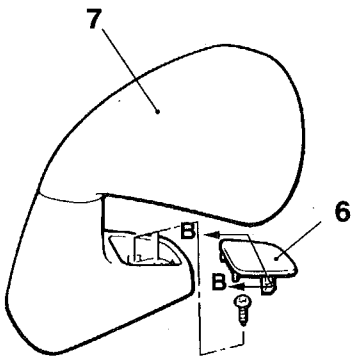

AW0241AL

Section B – B

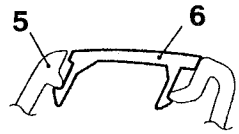

AW0564AL

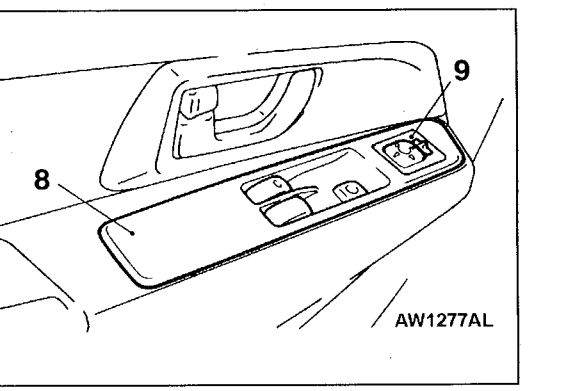

AW1277AL

Door mirror removal steps

1. Delta inner cover
2. Clip
3. Boot
4. Mirror assembly
5. Mirror

◀A▶ ▶A◀

Side under mirror removal steps

1. Side under mirror cover
2. Side under mirror

Electric remote-controlled mirror switch removal steps

8. Power window and remote-controlled mirror switch assembly (Refer to GROUP 42 – Door trim and water proof film.)
9. Electric remote-controlled mirror switch

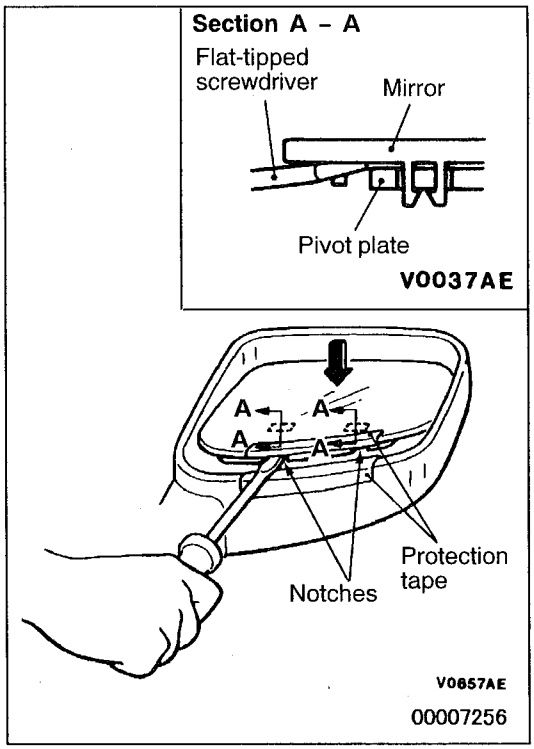

REMOVAL SERVICE POINT

◀A▶ MIRROR REMOVAL

Using a hand, push the upper part of mirror to tilt it. Apply a protection tape as shown in the illustration. Insert a flat-tipped screwdriver between a notch behind the mirror and the pivot plate, and then pry off the lower part of mirror from the pivot plate.

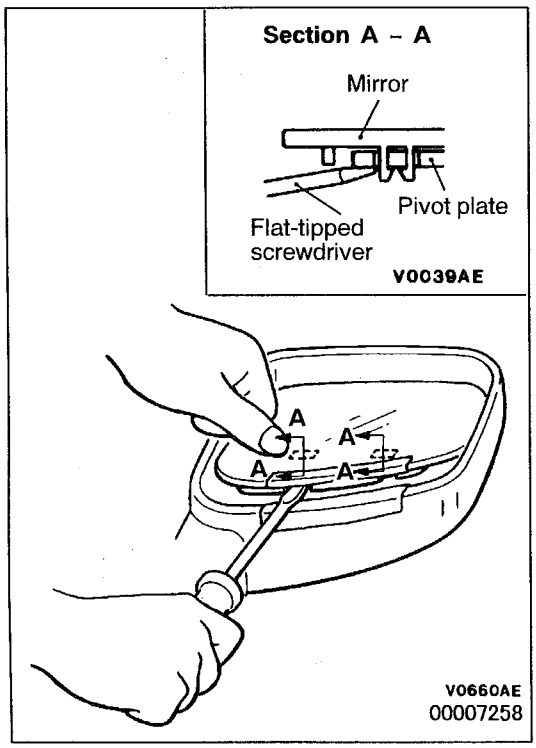

INSTALLATION SERVICE POINT

▶A◀ MIRROR INSTALLATION

While holding the pivot plate with a flat-tipped screwdriver, push the mirror to engage the clips at its lower part with the pivot plate.

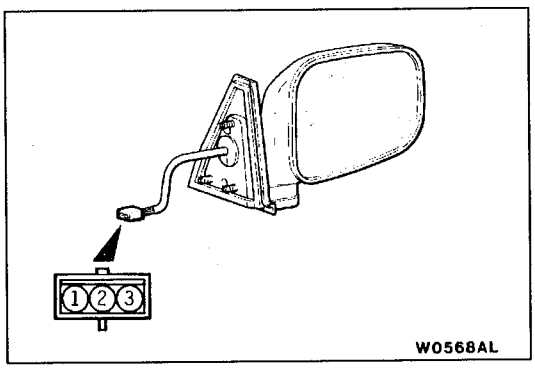

INSPECTION

ELECTRIC REMOTE-CONTROLLED MIRROR OPERATION CHECK

Battery connection terminal			Direction of operation
1	2	3	
⊖		⊕	UP
⊕		⊖	DOWN
⊕	⊖		RIGHT
⊖	⊕		LEFT

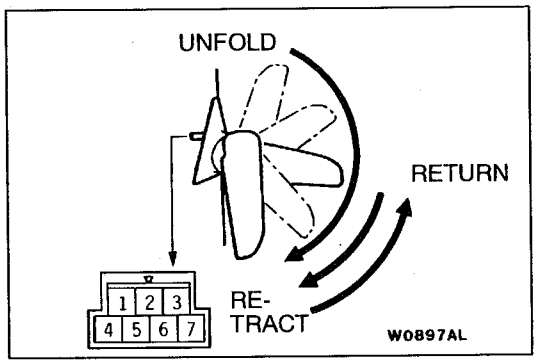

DOOR MIRROR RETRACTION FUNCTION CHECK

Battery connection terminal					Direction of operation
1	2	3	6	7	
⊕		⊖			UP
⊖		⊕			DOWN
	⊖	⊕			LEFT
	⊕	⊖			RIGHT
			⊖	⊕	RETURN or UNFOLD position to RETRACT position
			⊕	⊖	RETRACT position to RETURN position

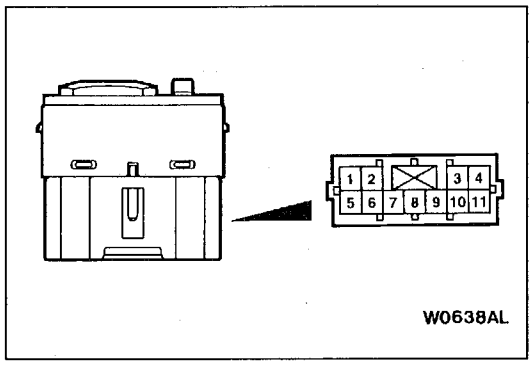

ELECTRIC REMOTE-CONTROLLED MIRROR SWITCH CONTINUITY CHECK

Switch	Switch position	Terminal No.												
		Left mirror					Right mirror					4	5	8	9
		1	6	9	10	11	1	2	3	6	9				
Adjustment switch	UP	○	○			○	○		○	○	○				
	DOWN	○		○		○	○		○		○				
	RIGHT	○		○	○		○	○			○				
	LEFT	○	○		○		○	○		○	○				
Mirror retracting switch	Retract and return											○			○
Illumination													○	○	

NOTE
Only the vehicles with electric retractable door mirror are equipped with the mirror retracting switch and illumination.